Service manual

VLZ SPOT

- ※ Exploded Diagrams
- ※ Circuit Diagrams
- ※ Wiring Diagrams
- ※ Parts List

PRODUCT		VLZ SPOT		
PIC. NO.		Front Page	Series No.	N/A
EDIT		FILE NO.	HY-EXP-1745A	
CHECK		ORDER NO.	N/A	
APPROVE		VERSION	V105_003	

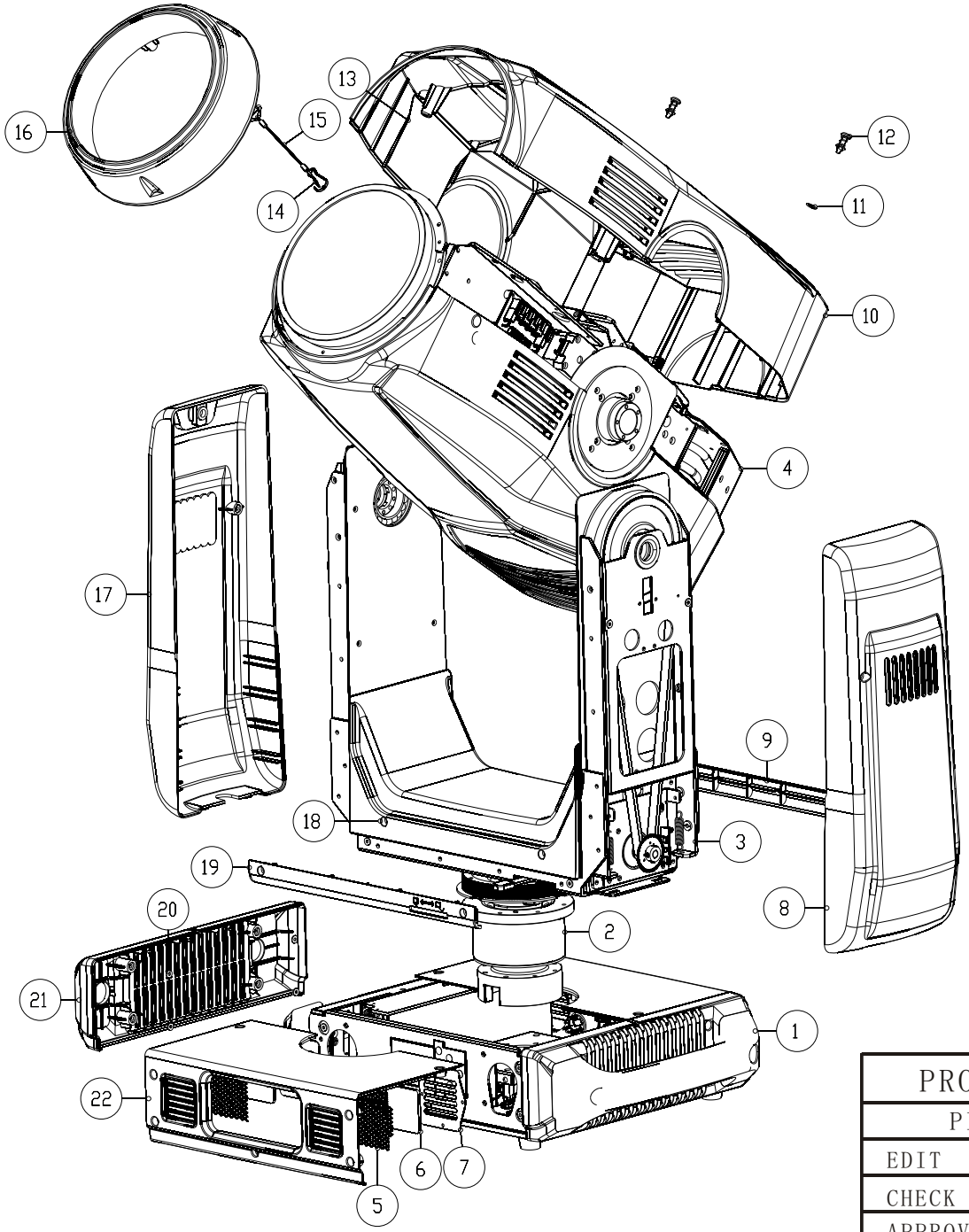

PRODUCT		**VLZ SPOT**			
PIC. NO.		36-0004-00-00-00			
EDIT		FILE NO.	HY-EXP-1745A	PAGE NO.	1/56
CHECK		VERSION	V105_003	DATE	2018. 08. 07
APPROVE		ECN NO.		DATE	

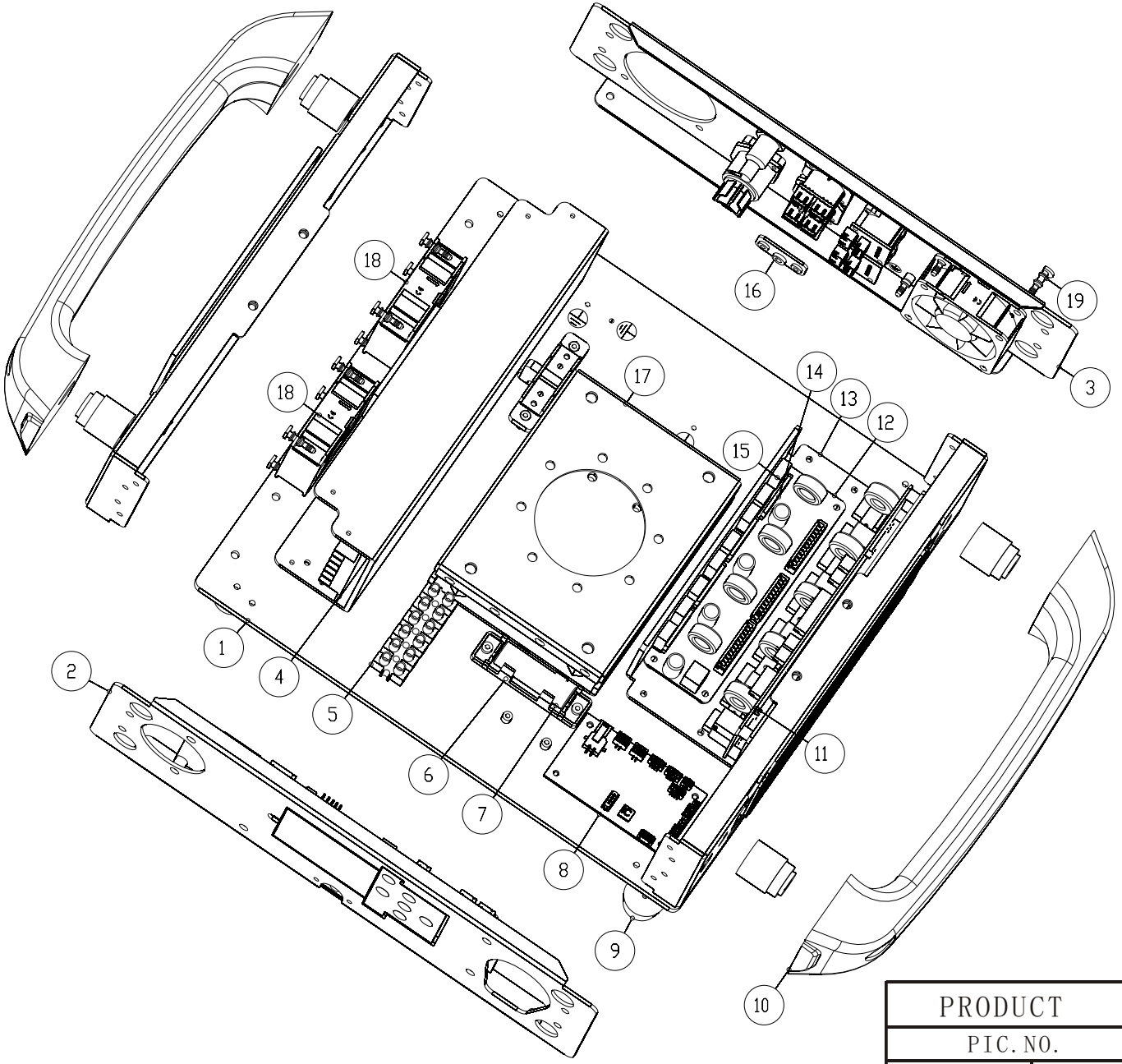

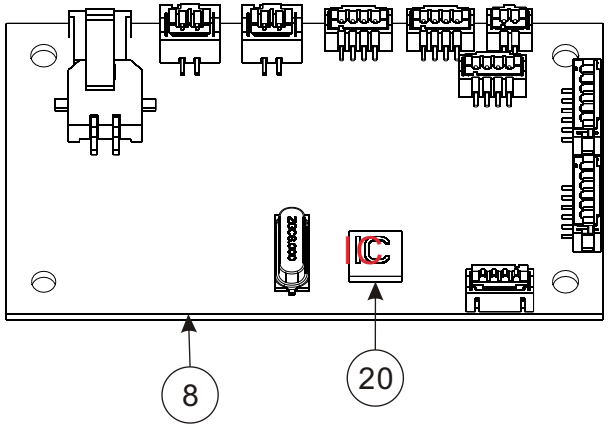

PRODUCT		**VLZ SPOT**			
PIC. NO.		36-0003-01-00-00			
EDIT		FILE NO.	HY-EXP-1745A	PAGE NO.	2/56
CHECK		VERSION	V105_003	DATE	2018. 08. 07
APPROVE		ECN NO.		DATE	

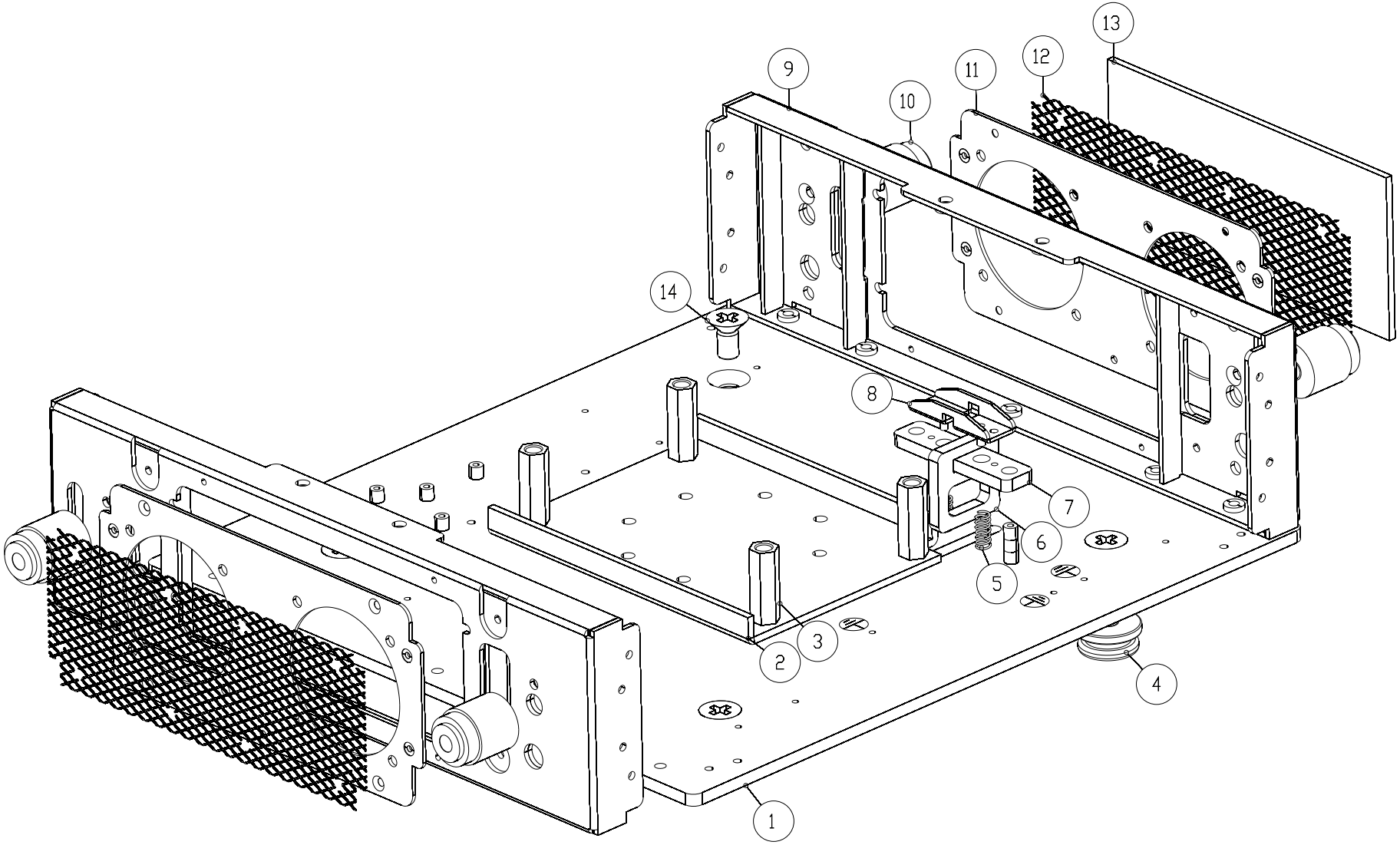

PRODUCT		**VLZ SPOT**			
PIC. NO.		36-0003-01-01-00			
EDIT		FILE NO.	HY-EXP-1745A	PAGE NO.	3/56
CHECK		VERSION	V105_003	DATE	2018. 08. 07
APPROVE		ECN NO.		DATE	

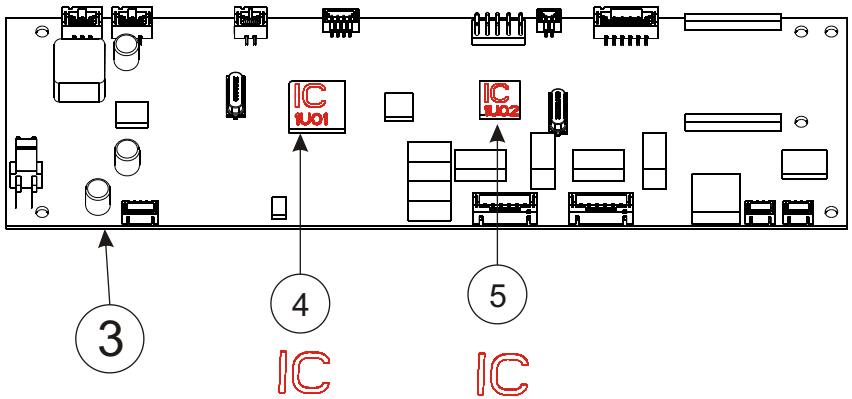

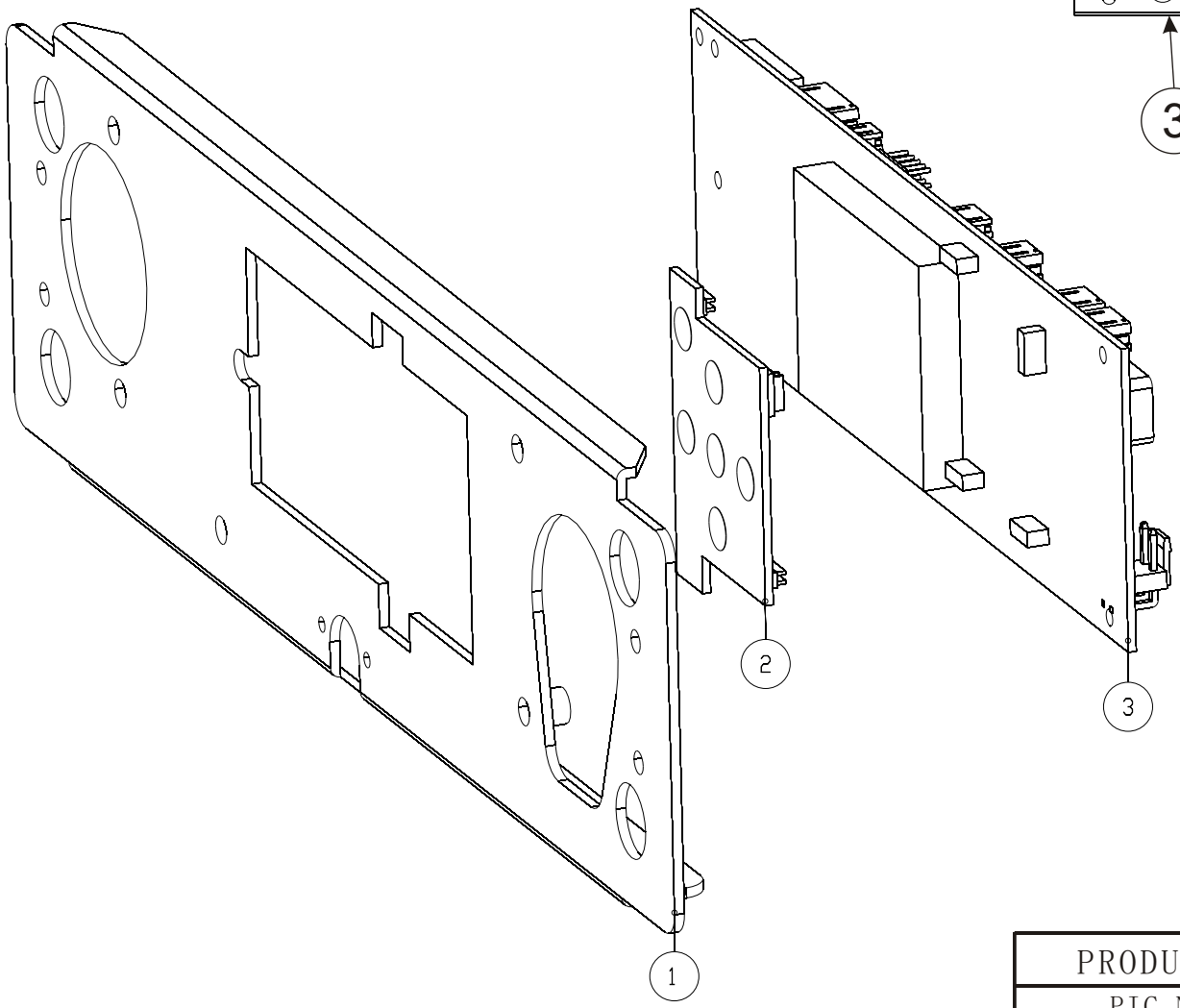

PRODUCT		VLZ SPOT			
PIC. NO.		36-0003-01-02-00			
EDIT		FILE NO.	HY-EXP-1745A	PAGE NO.	4/56
CHECK		VERSION	V105_003	DATE	2018. 08. 07
APPROVE		ECN NO.		DATE	

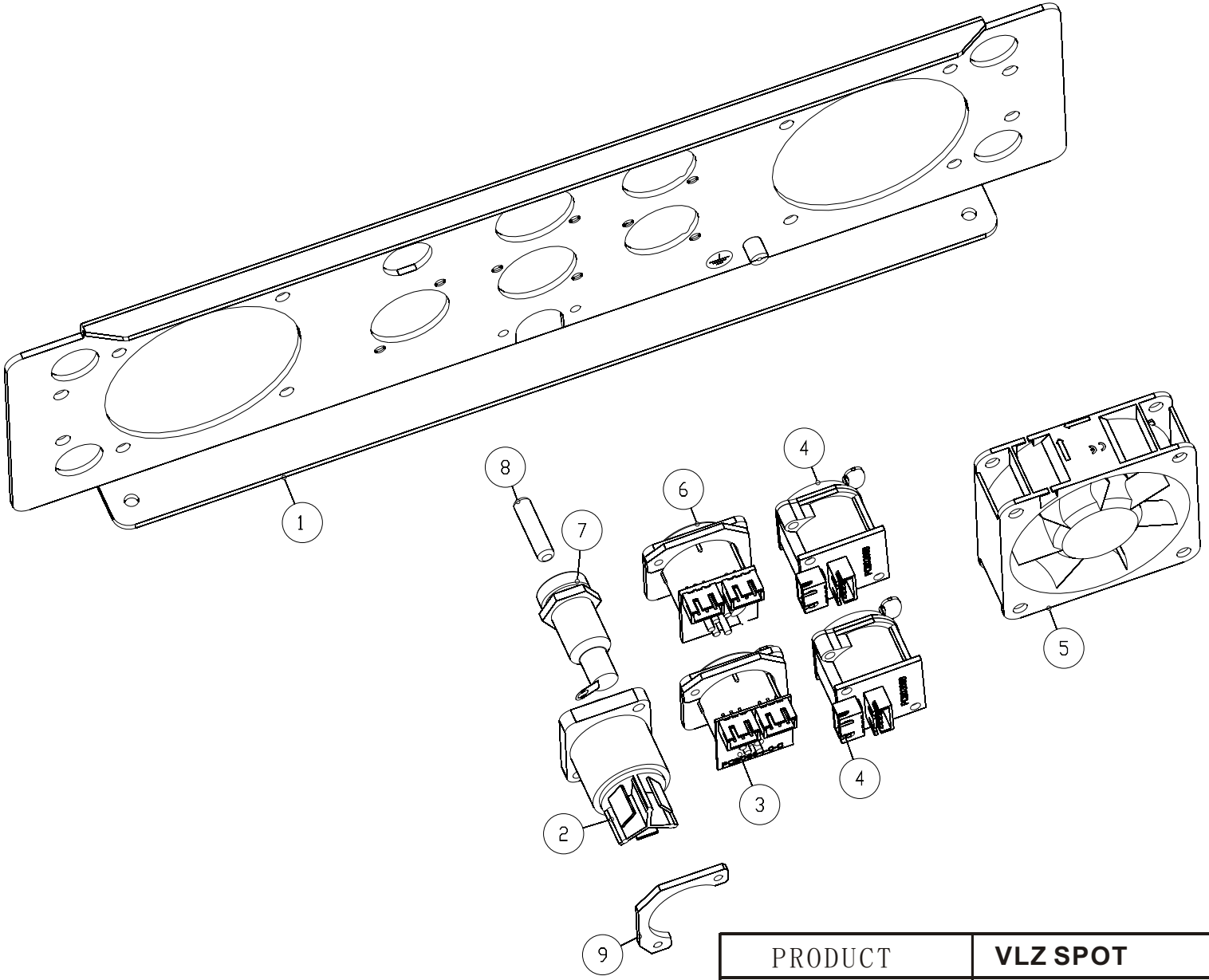

PRODUCT		**VLZ SPOT**			
PIC. NO.		36-0003-01-03-00			
EDIT		FILE NO.	HY-EXP-1745A	PAGE NO.	5/56
CHECK		VERSION	V105_003	DATE	2018. 08. 07
APPROVE		ECN NO.		DATE	

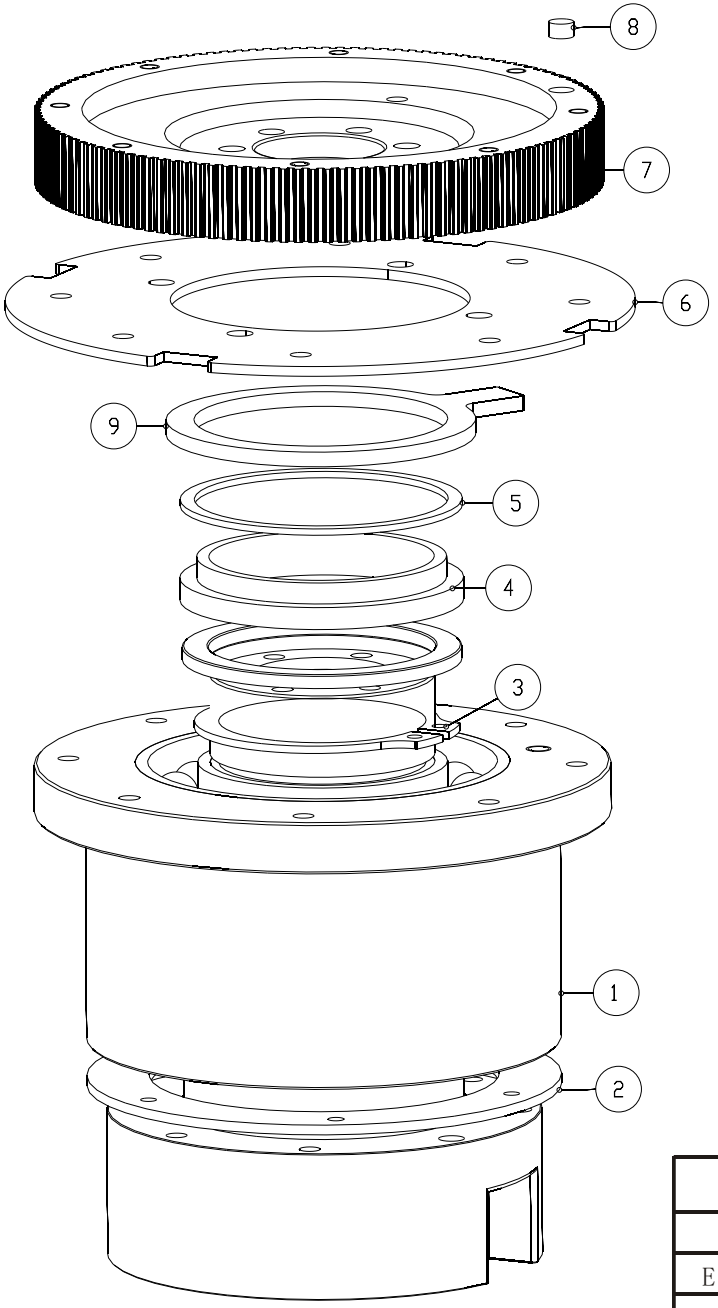

PRODUCT		**VLZ SPOT**			
PIC. NO.		36-0003-02-00-00			
EDIT		FILE NO.	HY-EXP-1745A	PAGE NO.	6/56
CHECK		VERSION	V105_003	DATE	2018. 08. 07
APPROVE		ECN NO.		DATE	

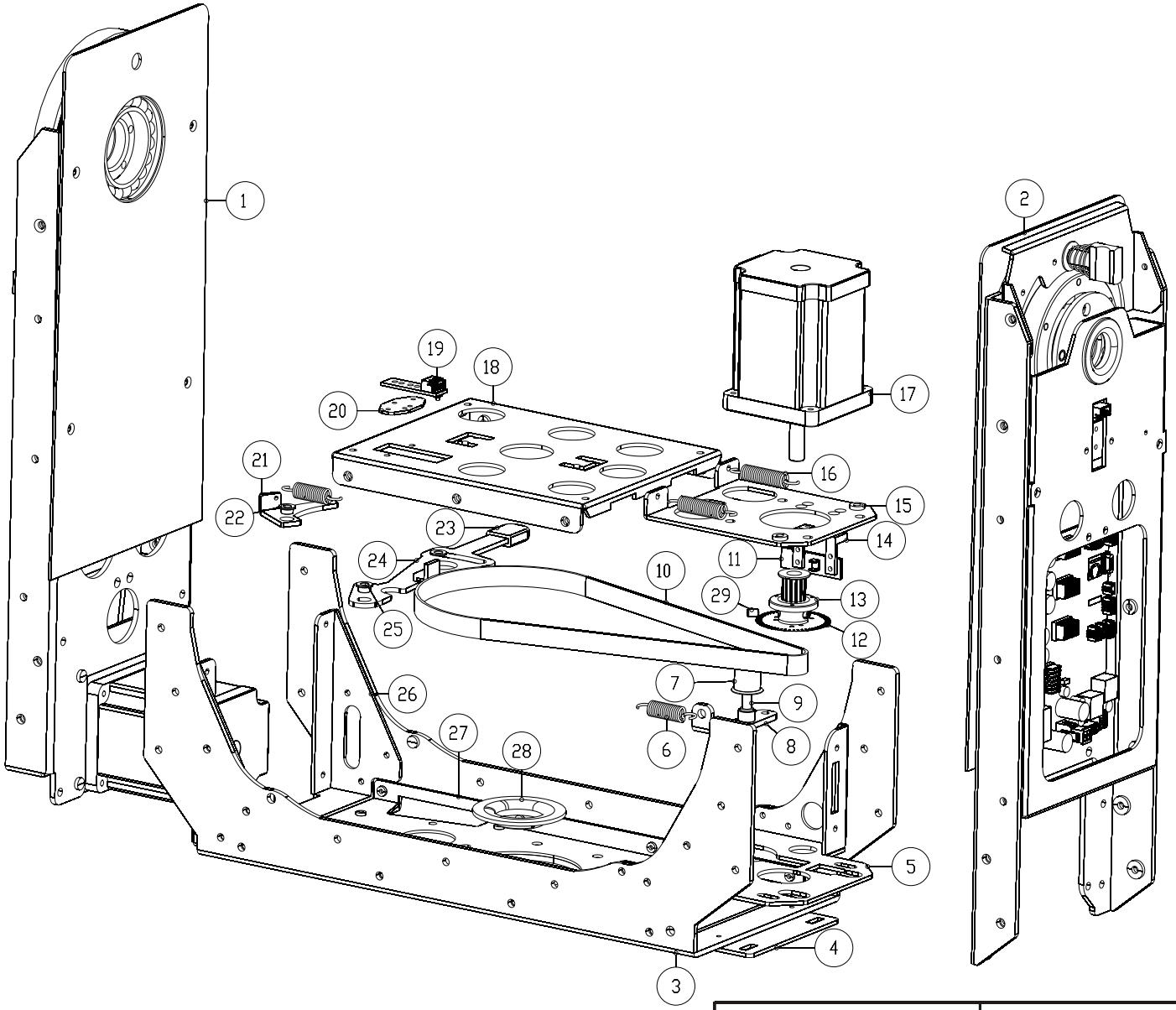

PRODUCT		**VLZ SPOT**			
PIC. NO.		36-0004-03-00-00			
EDIT		FILE NO.	HY-EXP-1745A	PAGE NO.	7/56
CHECK		VERSION	V105_003	DATE	2018. 08. 07
APPROVE		ECN NO.		DATE	

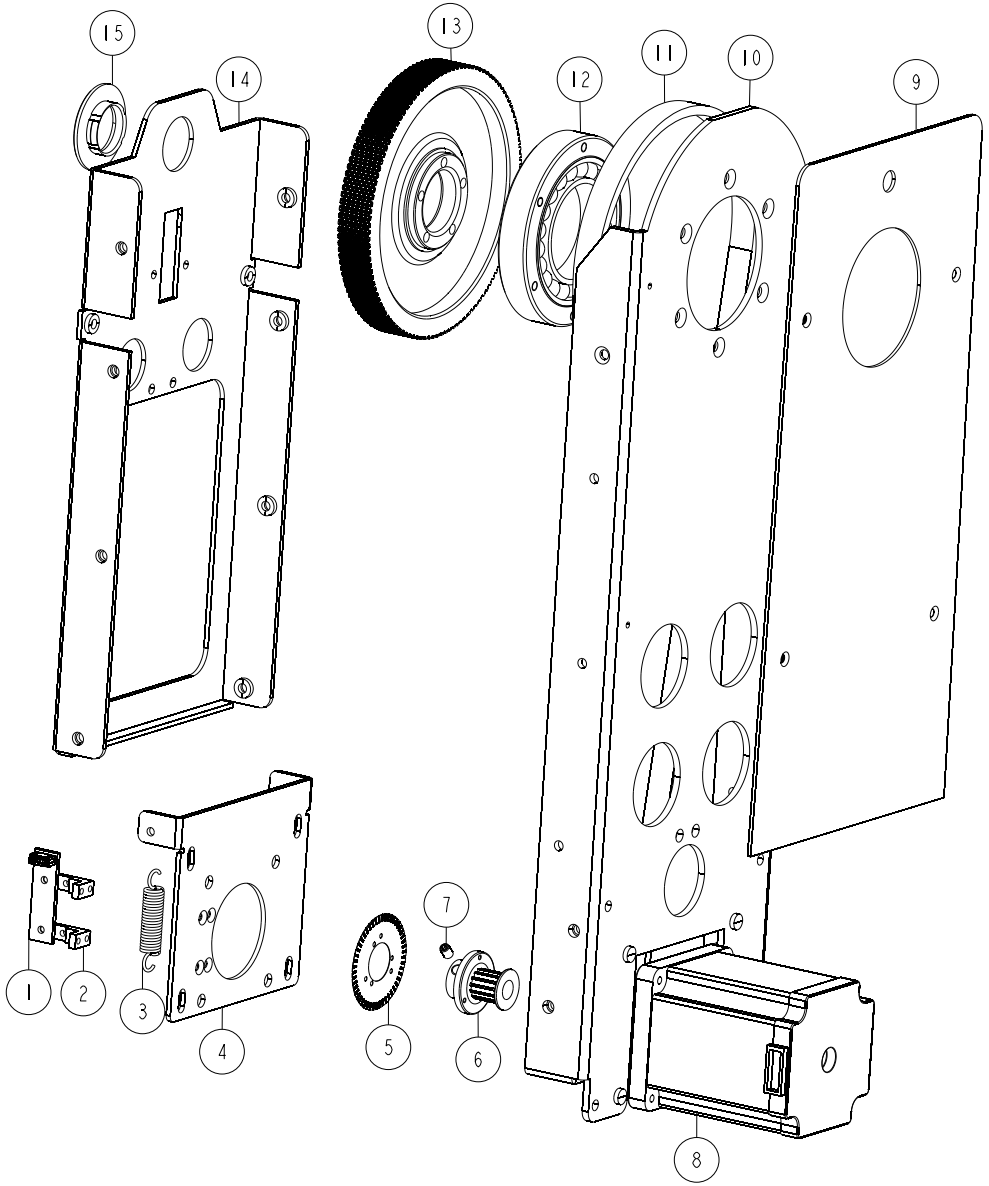

PRODUCT		VLZ SPOT			
PIC. NO.		36-0003-03-01-00			
EDIT		FILE NO.	HY-EXP-1745A	PAGE NO.	8/56
CHECK		VERSION	V105_003	DATE	2018. 08. 07
APPROVE		ECN NO.		DATE	

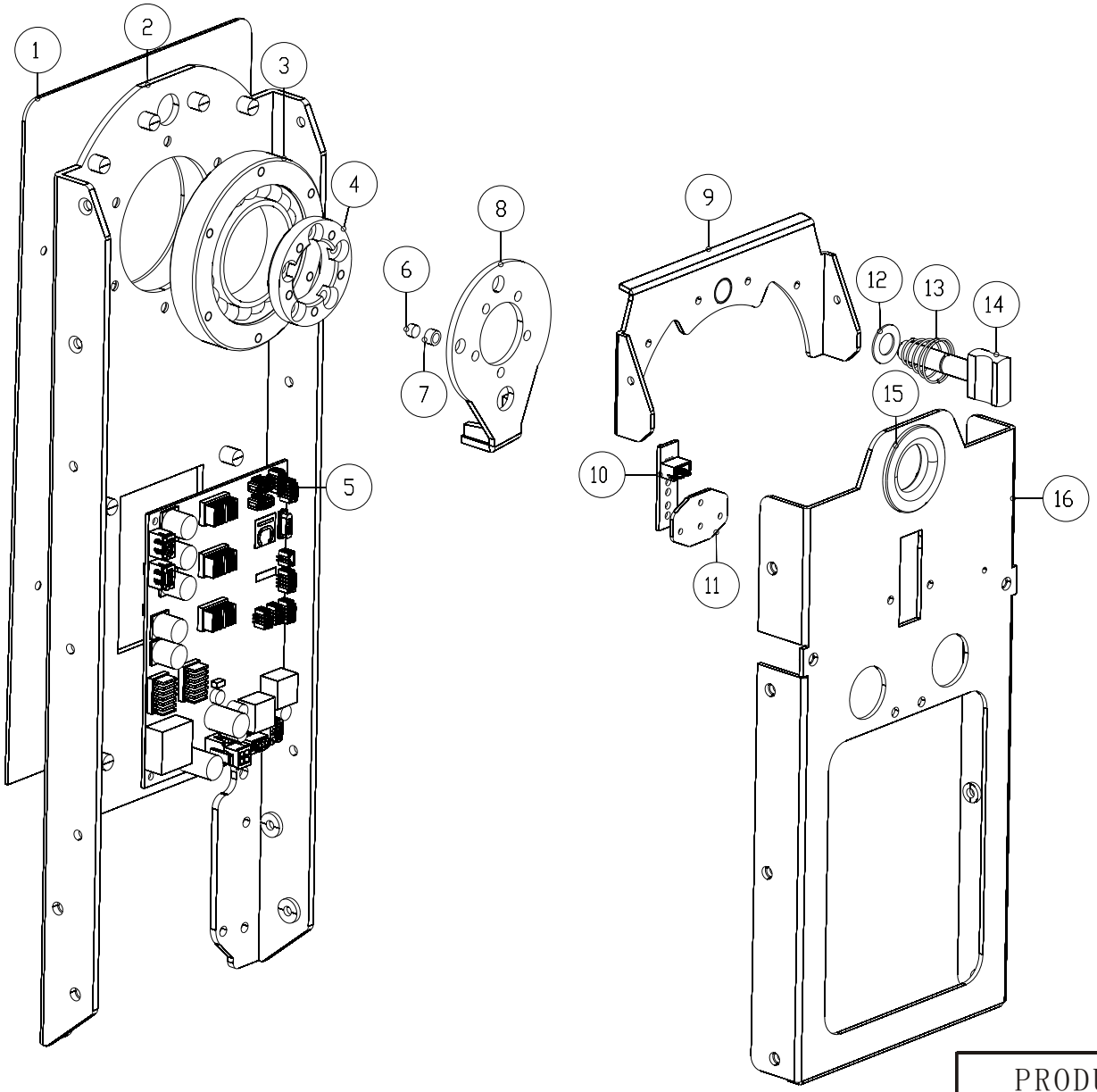

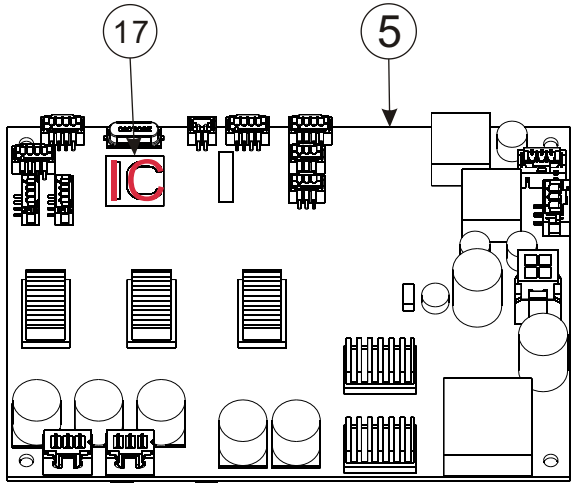

PRODUCT		**VLZ SPOT**			
PIC. NO.		36-0004-03-02-00			
EDIT		FILE NO.	HY-EXP-1745A	PAGE NO.	9/56
CHECK		VERSION	V105_003	DATE	2018. 08. 07
APPROVE		ECN NO.		DATE	

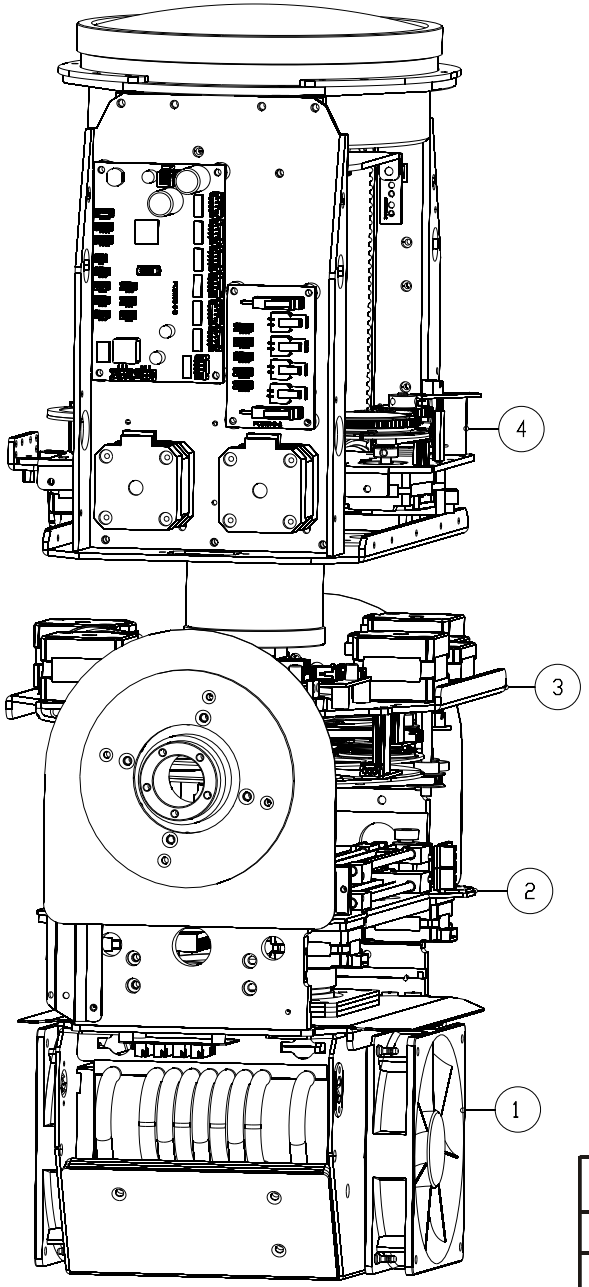

PRODUCT		**VLZ SPOT**			
PIC. NO.		36-0004-04-00-00			
EDIT		FILE NO.	HY-EXP-1745A	PAGE NO.	10/56
CHECK		VERSION	V105_003	DATE	2018. 08. 07
APPROVE		ECN NO.		DATE	

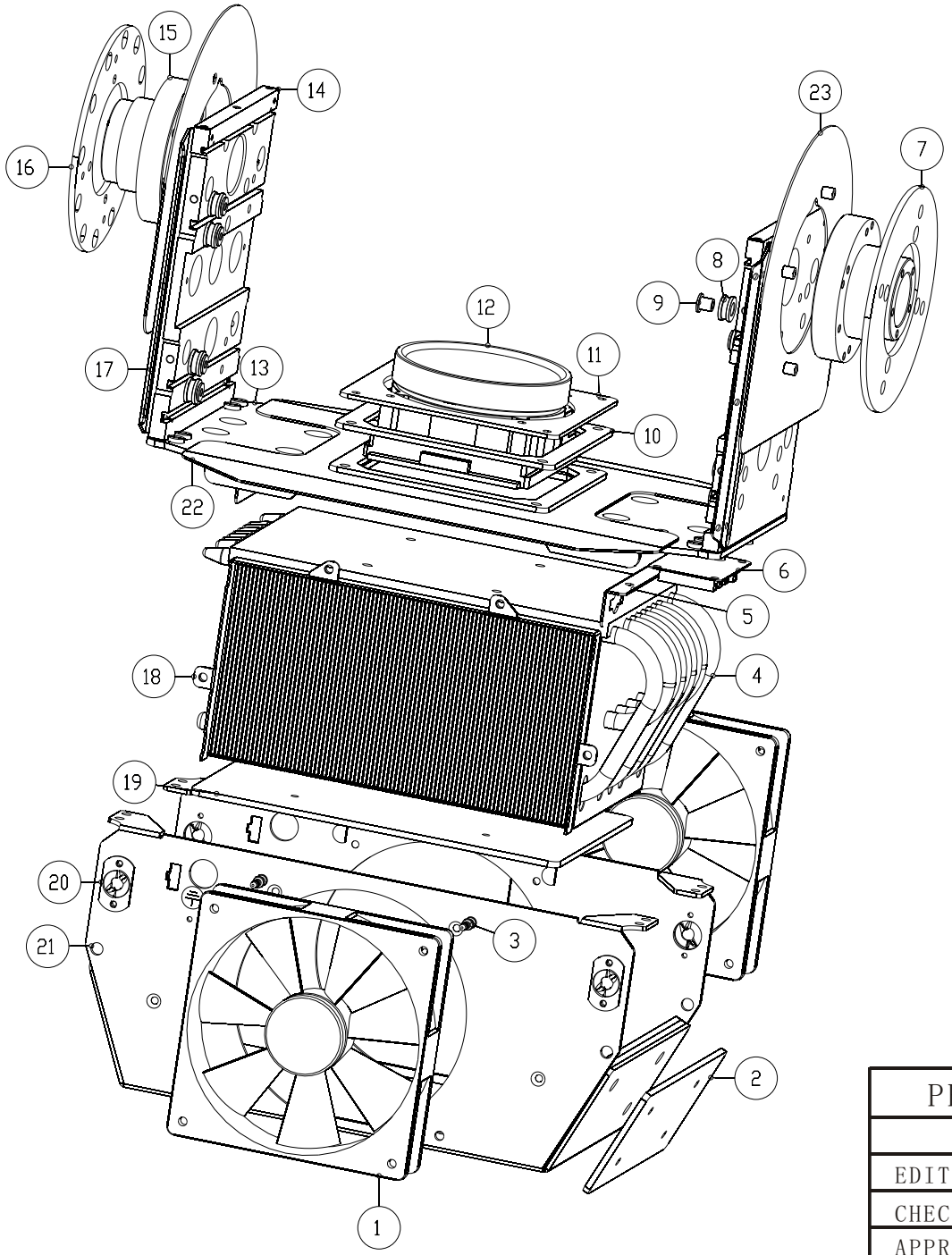

PRODUCT		**VLZ SPOT**			
PIC. NO.		36-0004-04-01-00			
EDIT		FILE NO.	HY-EXP-1745A	PAGE NO.	11/56
CHECK		VERSION	V105_003	DATE	2018. 08. 07
APPROVE		ECN NO.		DATE	

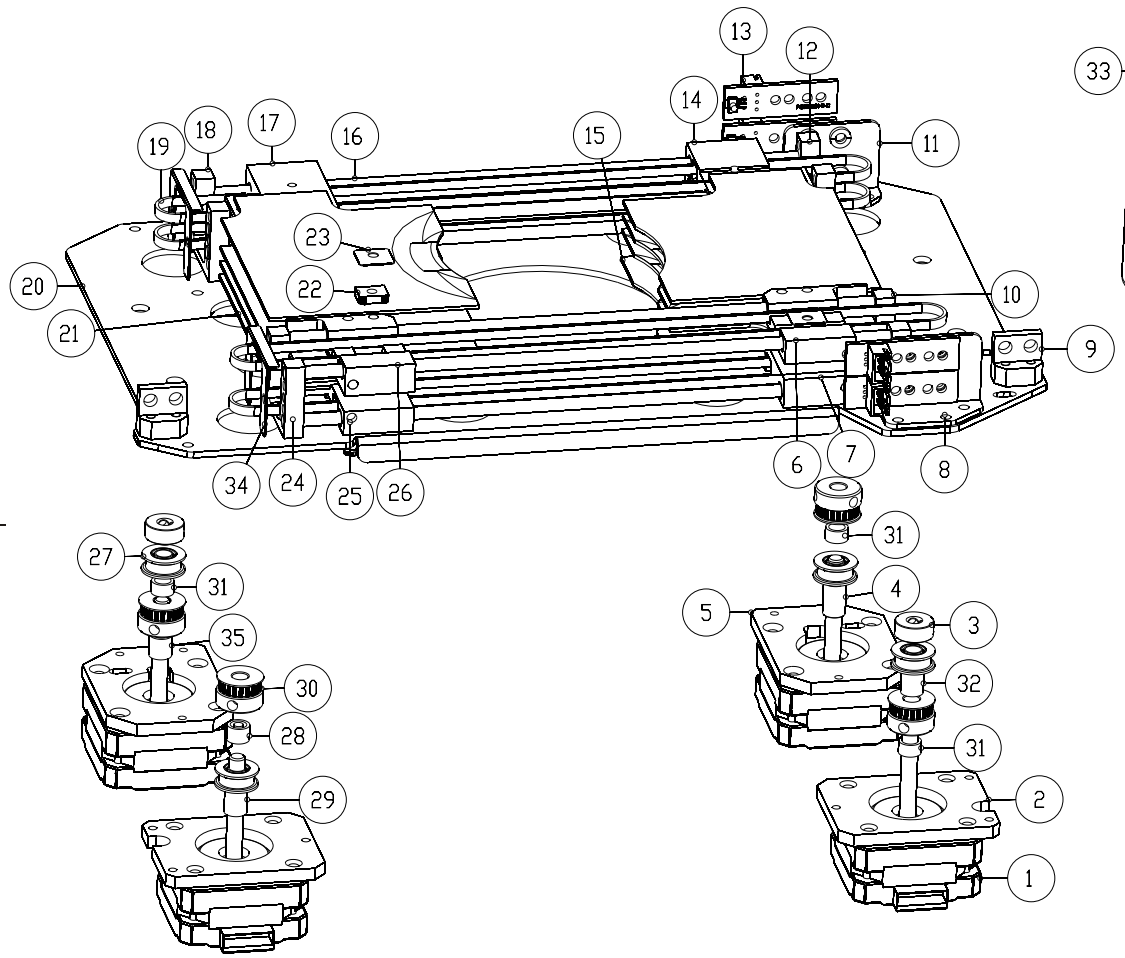

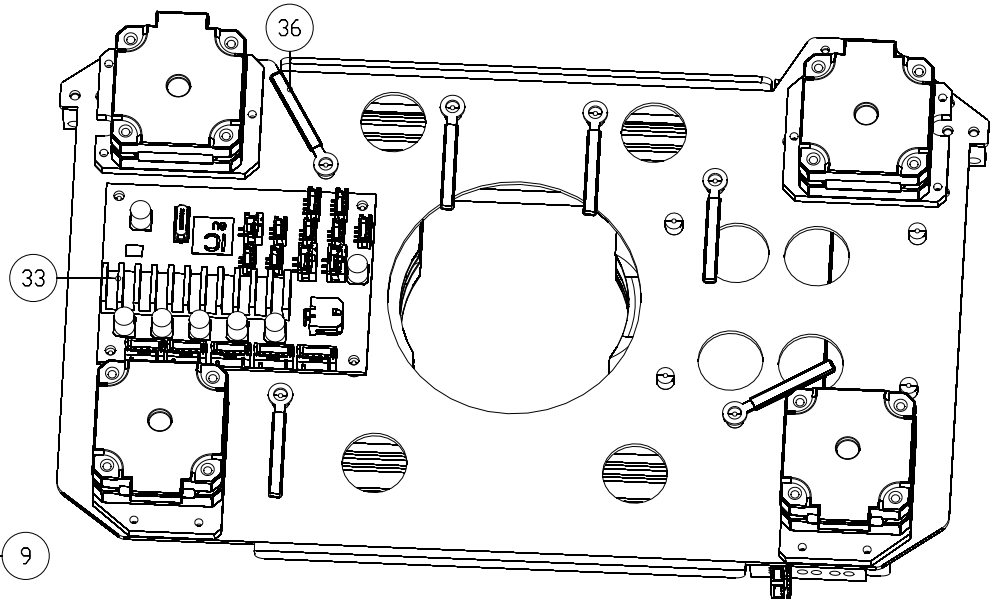

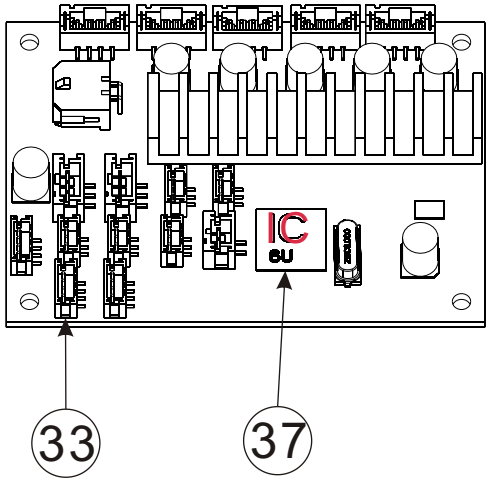

PRODUCT		VLZ SPOT			
PIC. NO.		36-0004-04-02-00			
EDIT		FILE NO.	HY-EXP-1745A	PAGE NO.	12/56
CHECK		VERSION	V105_003	DATE	2018. 08. 07
APPROVE		ECN NO.		DATE	

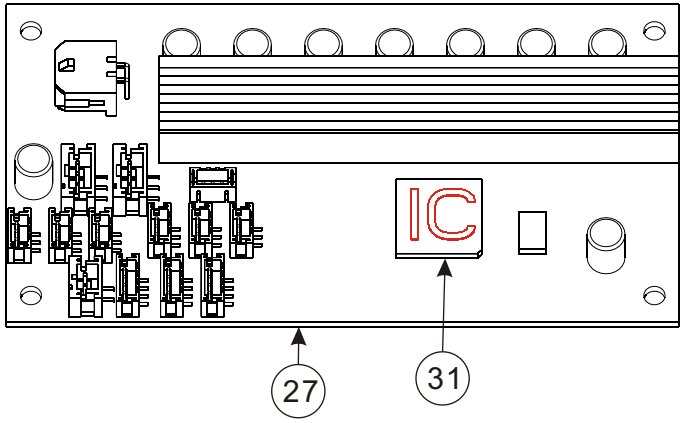

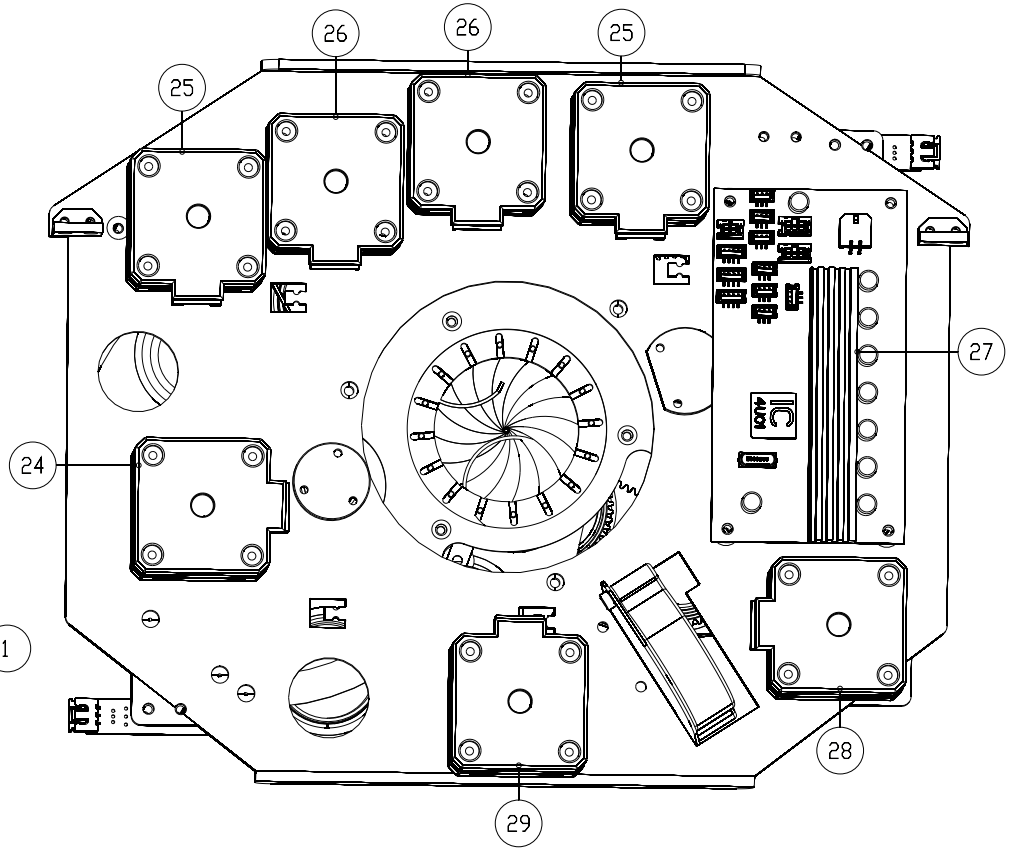

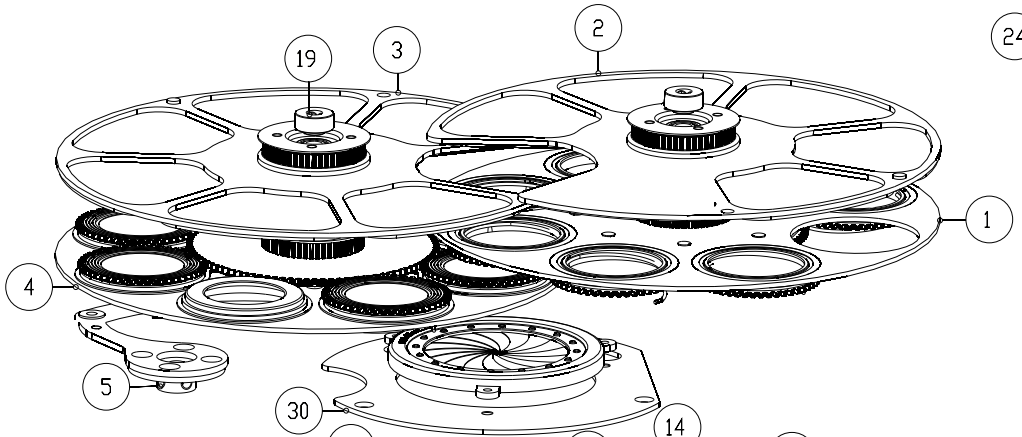

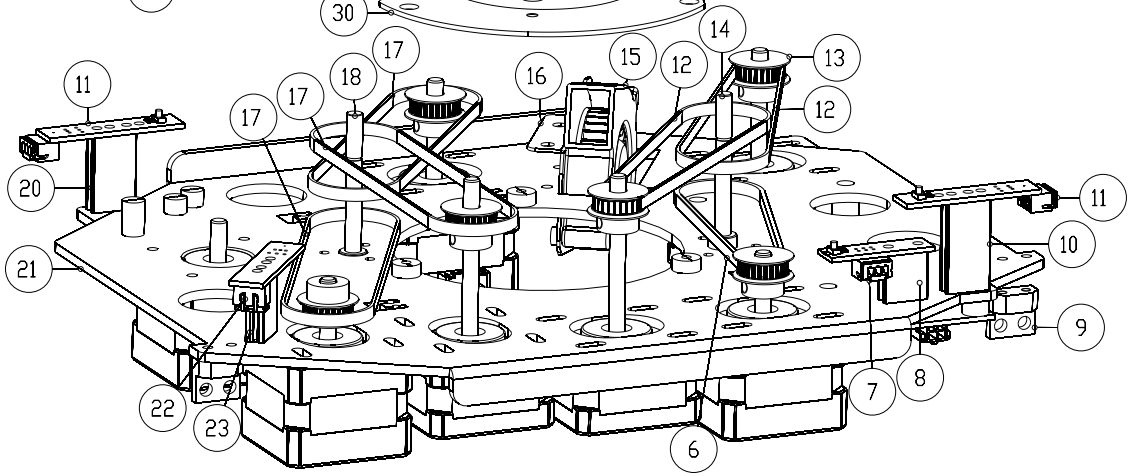

PRODUCT		**VLZ SPOT**			
PIC. NO.		36-0004-04-03-00			
EDIT		FILE NO.	HY-EXP-1745A	PAGE NO.	13/56
CHECK		VERSION	V105_003	DATE	2018. 08. 07
APPROVE		ECN NO.		DATE	

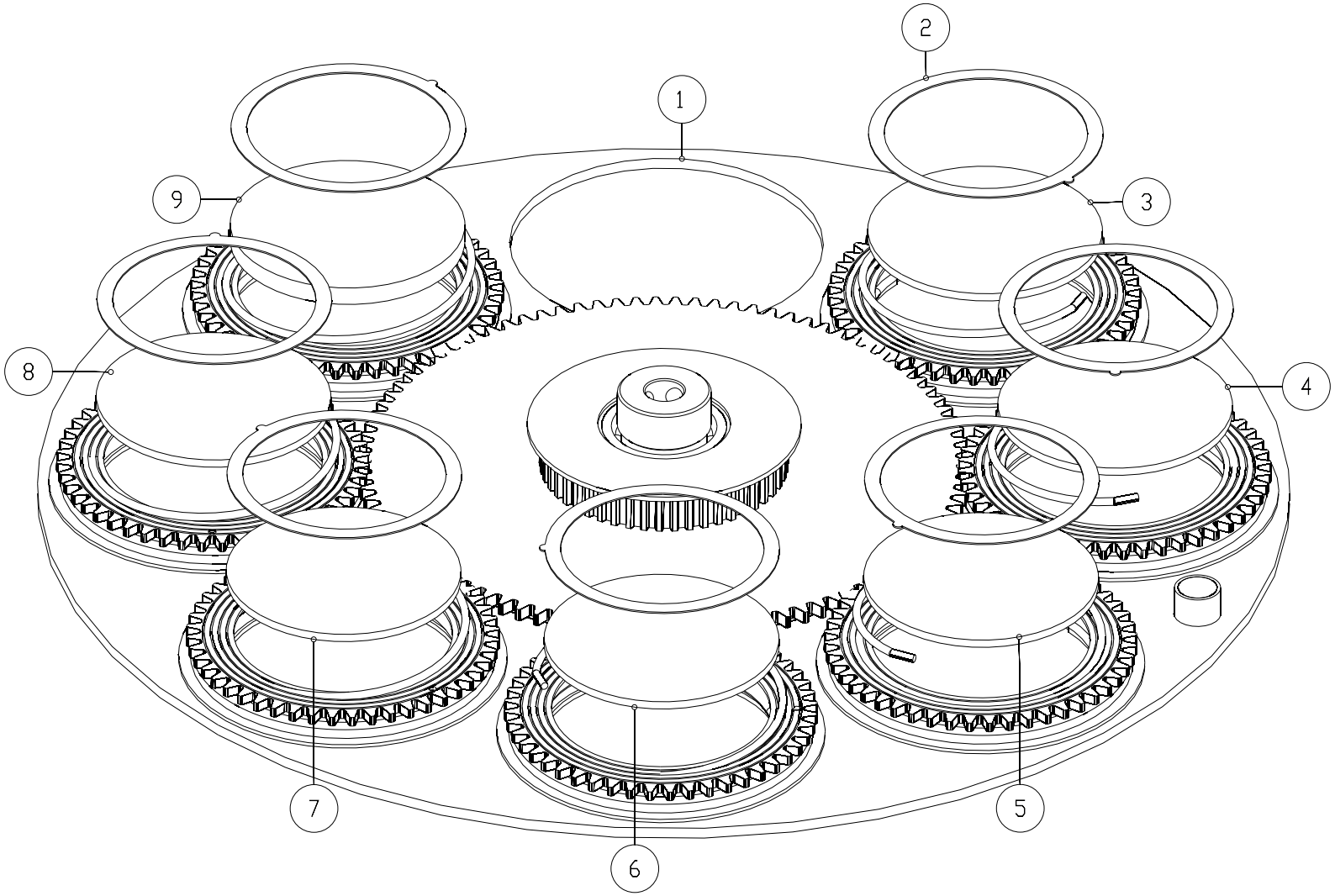

PRODUCT		**VLZ SPOT**			
PIC. NO.		A001-VL550B-04B-12-00_A00			
EDIT		FILE NO.	HY-EXP-1745A	PAGE NO.	14/56
CHECK		VERSION	V105_003	DATE	2018. 08. 07
APPROVE		ECN NO.		DATE	

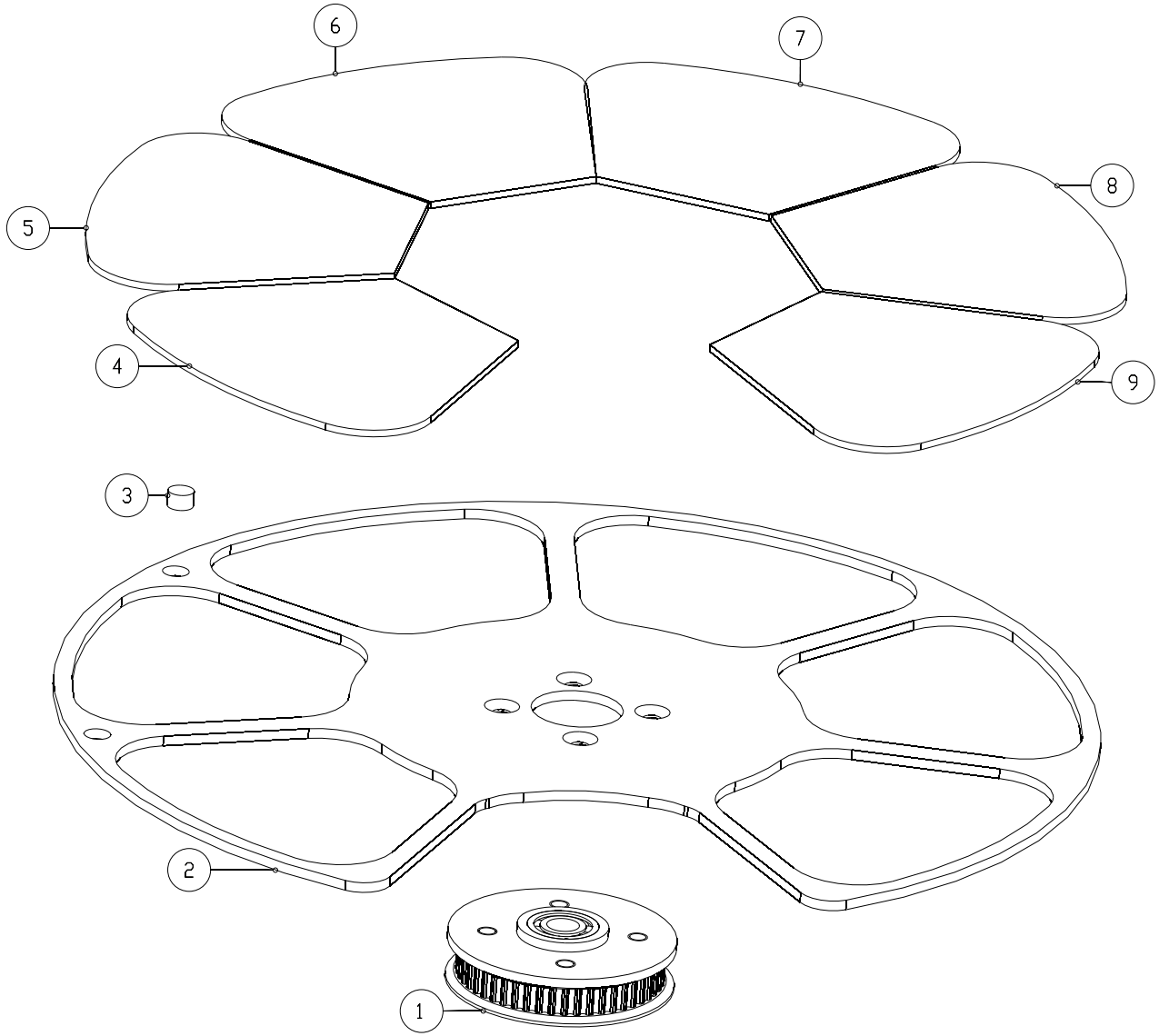

PRODUCT		**VLZ SPOT**			
PIC. NO.		A001-VL550S-04A-42_A00			
EDIT		FILE NO.	HY-EXP-1745A	PAGE NO.	15/56
CHECK		VERSION	V105_003	DATE	2018. 08. 07
APPROVE		ECN NO.		DATE	

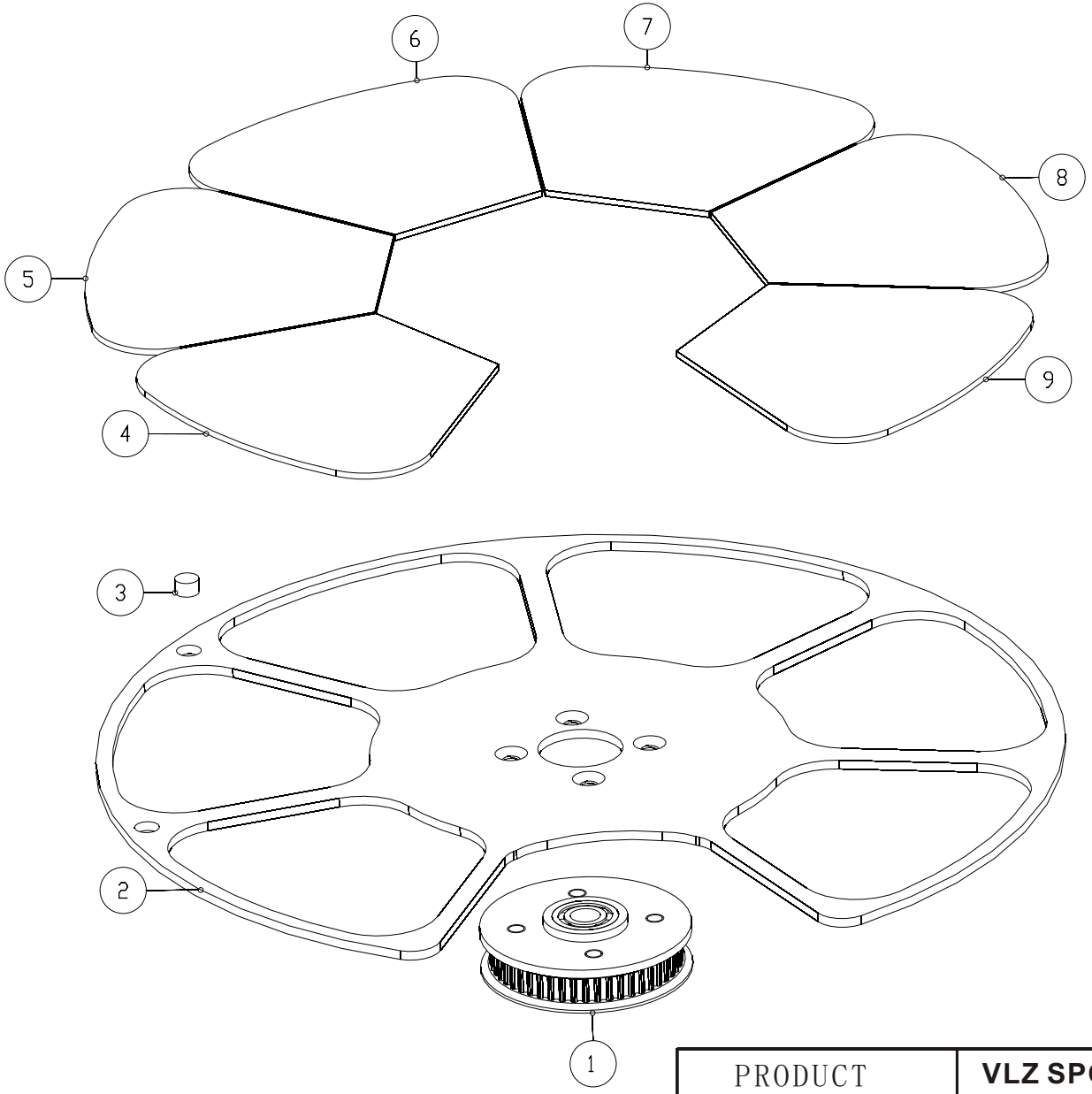

PRODUCT		**VLZ SPOT**			
PIC. NO.		A002-VL550S-04A-42_A00			
EDIT		FILE NO.	HY-EXP-1745A	PAGE NO.	16/56
CHECK		VERSION	V105_003	DATE	2018. 08. 07
APPROVE		ECN NO.		DATE	

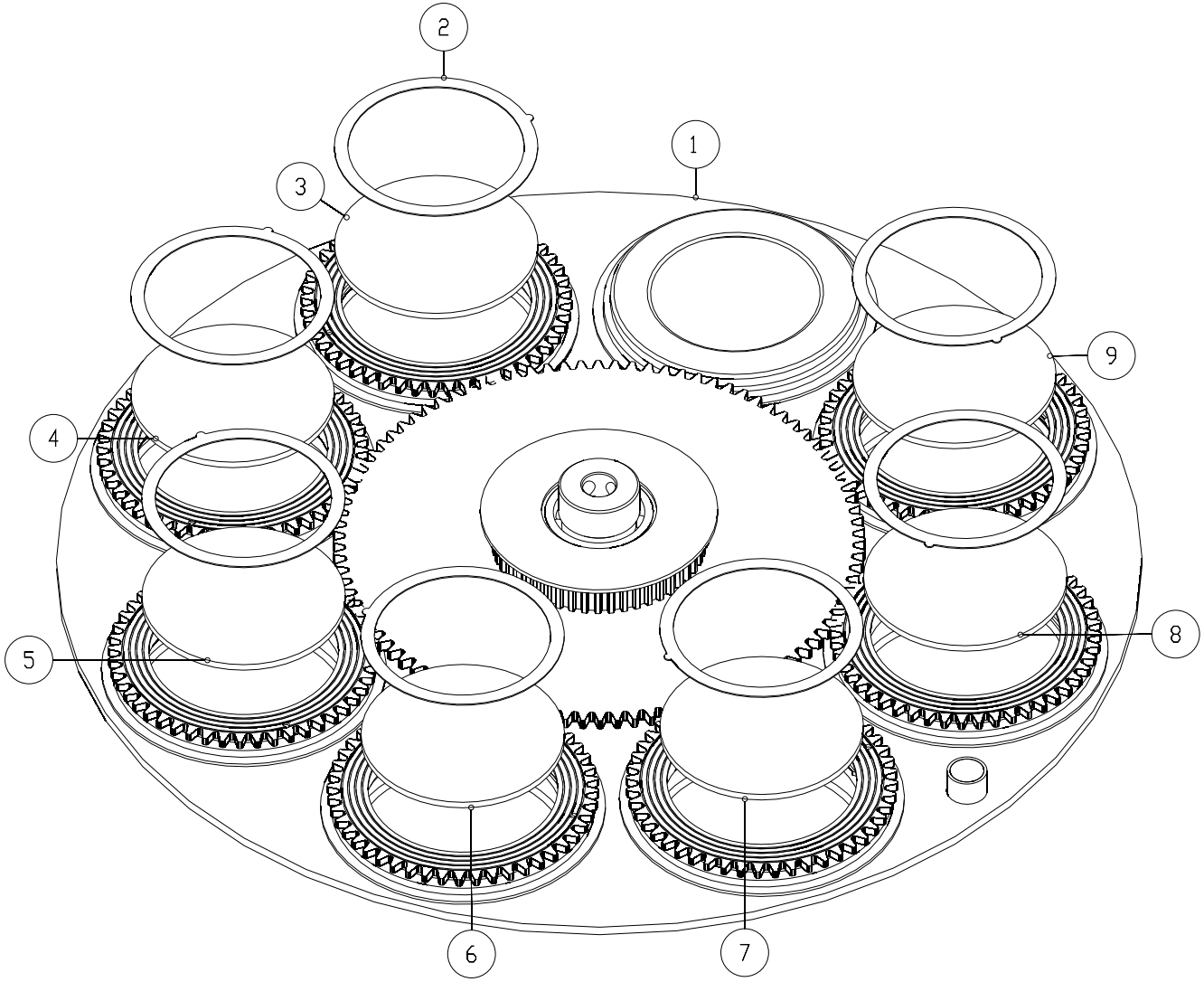

PRODUCT		**VLZ SPOT**			
PIC. NO.		A001-VL550B-04-01A-00_A00			
EDIT		FILE NO.	HY-EXP-1745A	PAGE NO.	17/56
CHECK		VERSION	V105_003	DATE	2018. 08. 07
APPROVE		ECN NO.		DATE	

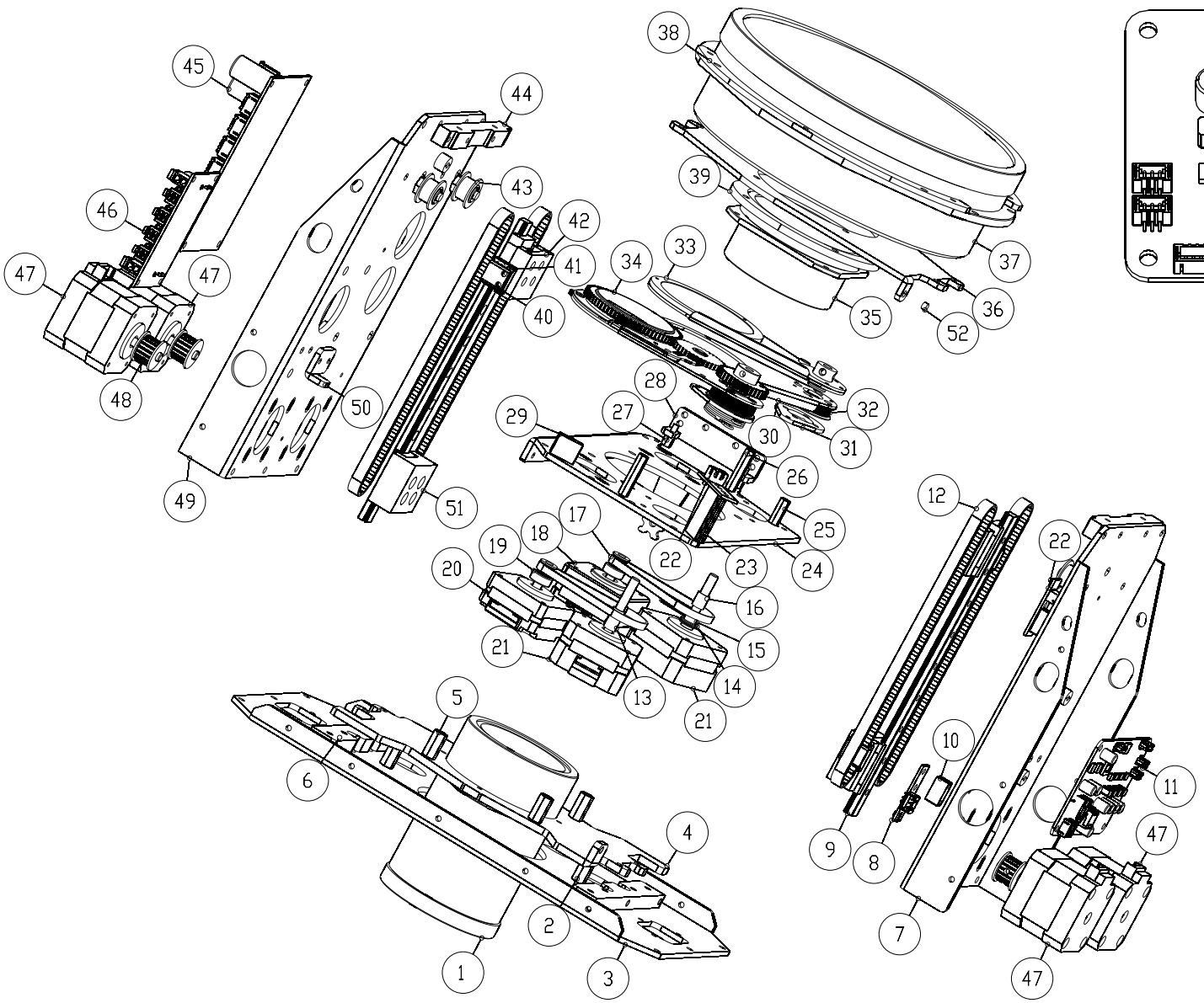

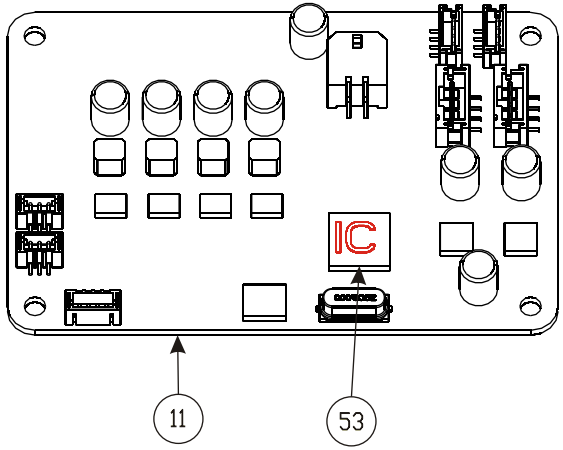

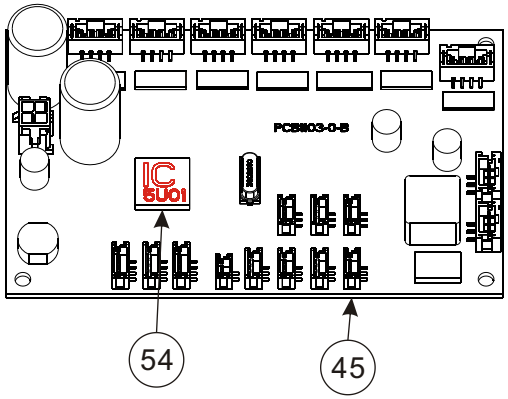

PRODUCT		VLZ SPOT			
PIC. NO.		36-0004-04-04-00			
EDIT		FILE NO.	HY-EXP-1745A	PAGE NO.	18/56
CHECK		VERSION	V105_003	DATE	2018. 08. 07
APPROVE		ECN NO.		DATE	

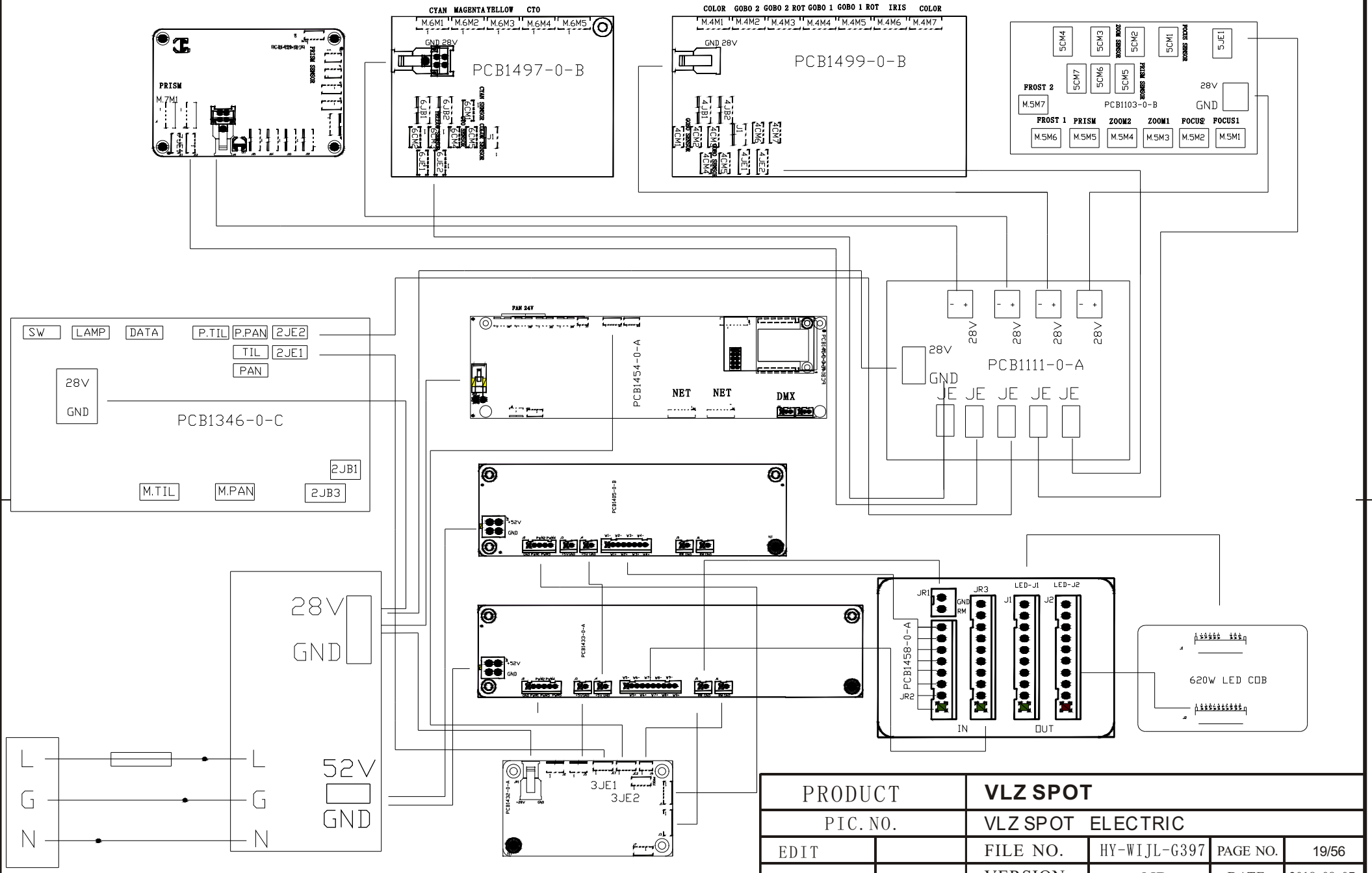

PRODUCT		VLZ SPOT			
PIC. NO.		VLZ SPOT ELECTRIC			
EDIT		FILE NO.	HY-WIJL-G397	PAGE NO.	19/56
CHECK		VERSION	NR	DATE	2018. 08. 07
APPROVE		ECN NO.		DATE	

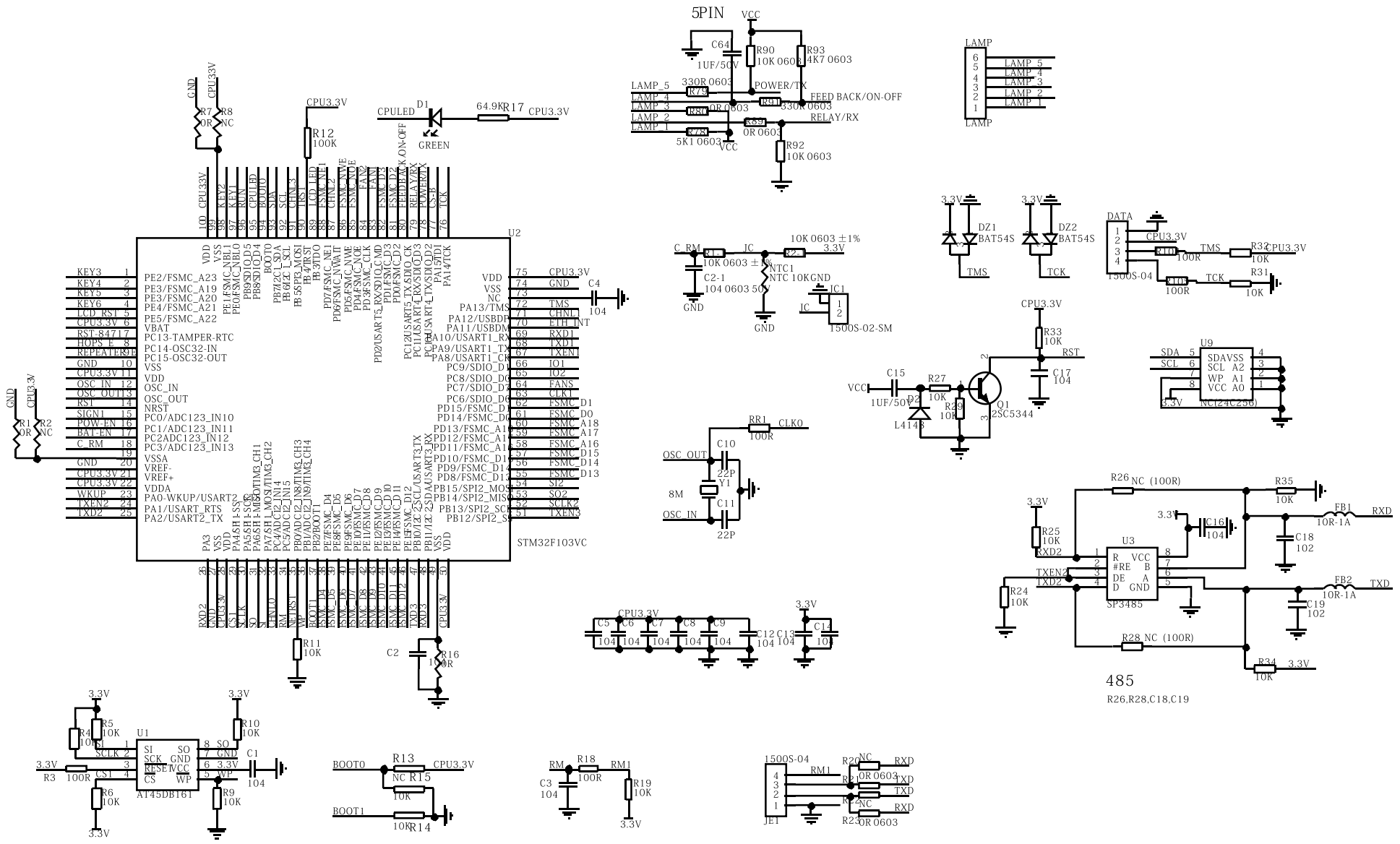

PRODUCT		VLZ SPOT			
PIC. NO.		PCB1428-0-B SCHEME (1/5)			
EDIT		FILE NO.	HY-WIEC-1698	PAGE NO.	20/56
CHECK		VERSION	NR	DATE	2018. 08. 07
APPROVE		ECN NO.		DATE	

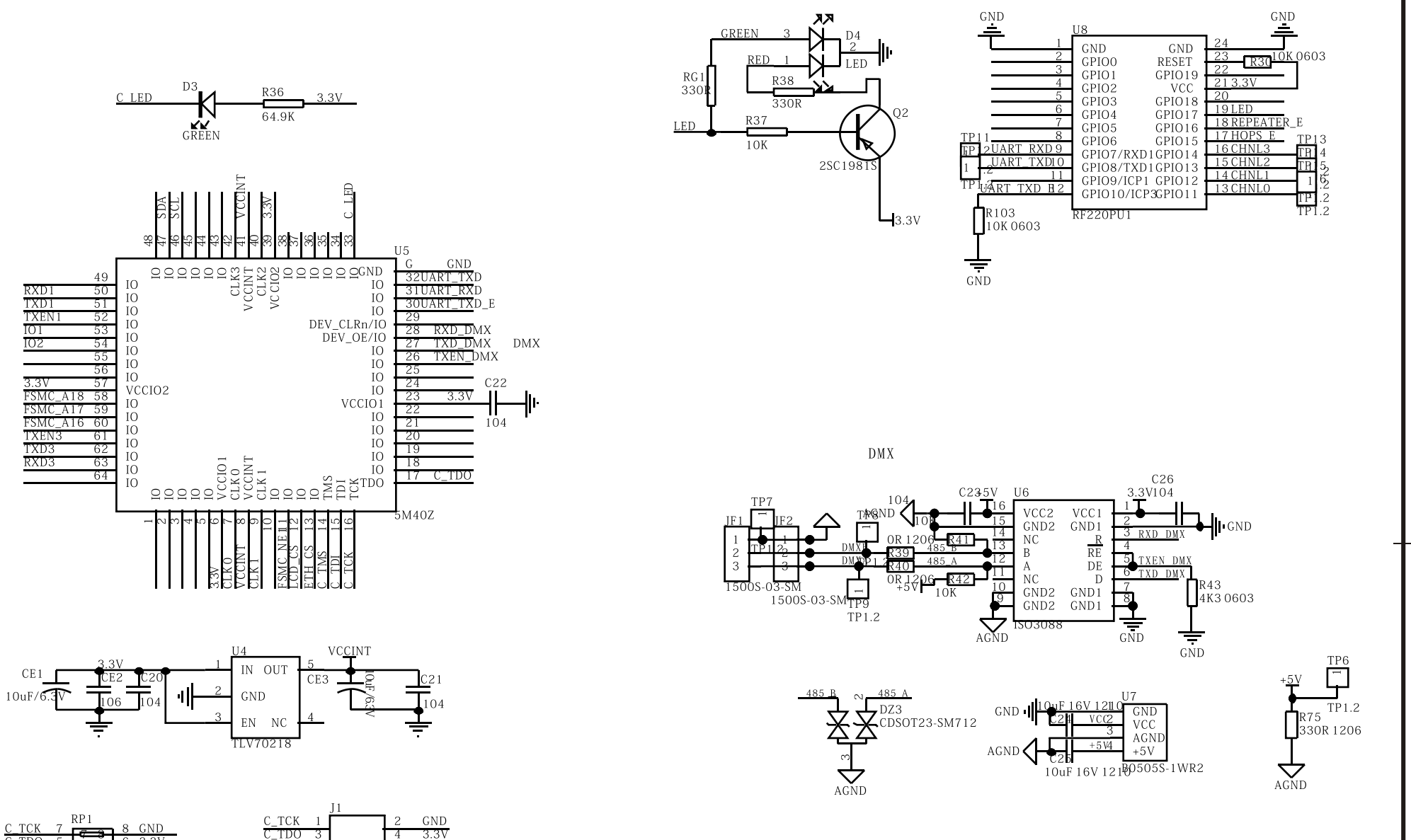

PRODUCT		VLZ SPOT			
PIC. NO.		PCB1428-0-B SCHEME (2/5)			
EDIT		FILE NO.	HY-WIEC-1698	PAGE NO.	21/56
CHECK		VERSION	NR	DATE	2018. 08. 07
APPROVE		ECN NO.		DATE	

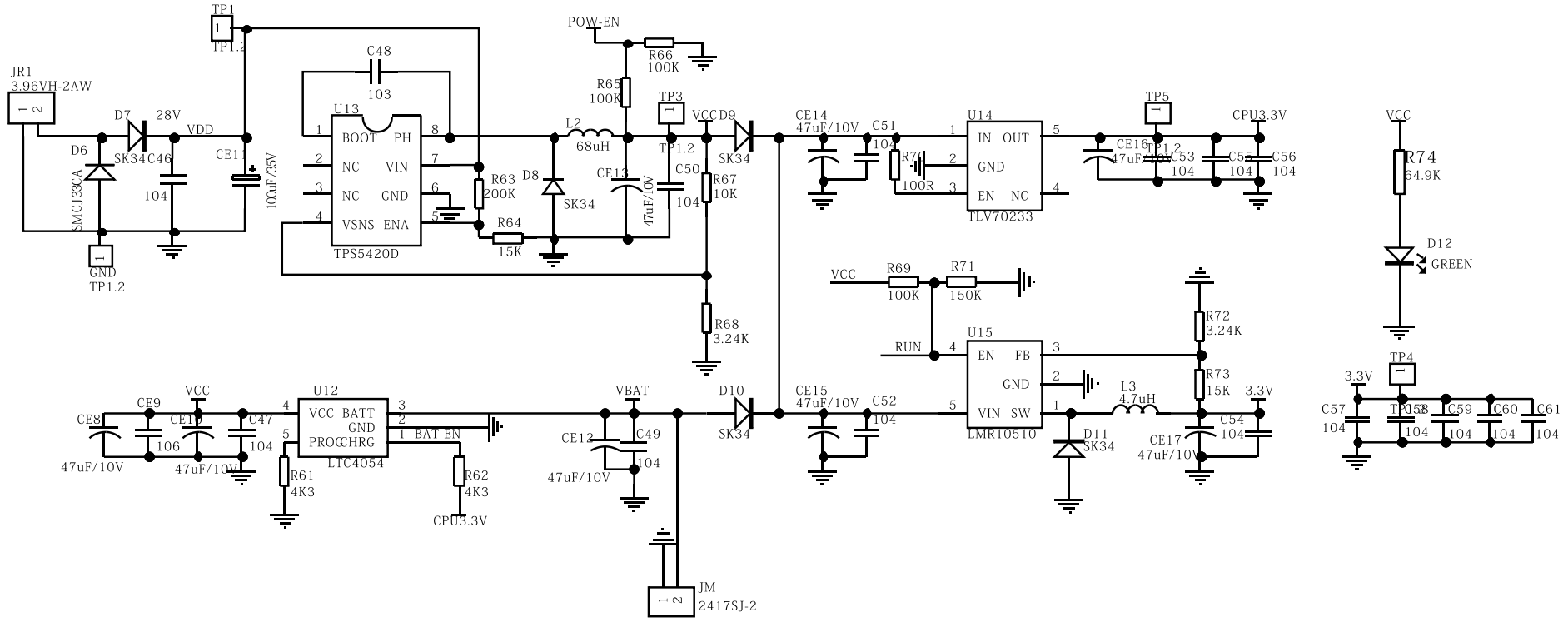

PRODUCT		**VLZ SPOT**			
PIC. NO.		PCB1428-0-B SCHEME (3/5)			
EDIT		FILE NO.	HY-WIEC-1698	PAGE NO.	22/56
CHECK		VERSION	NR	DATE	2018. 08. 07
APPROVE		ECN NO.		DATE	

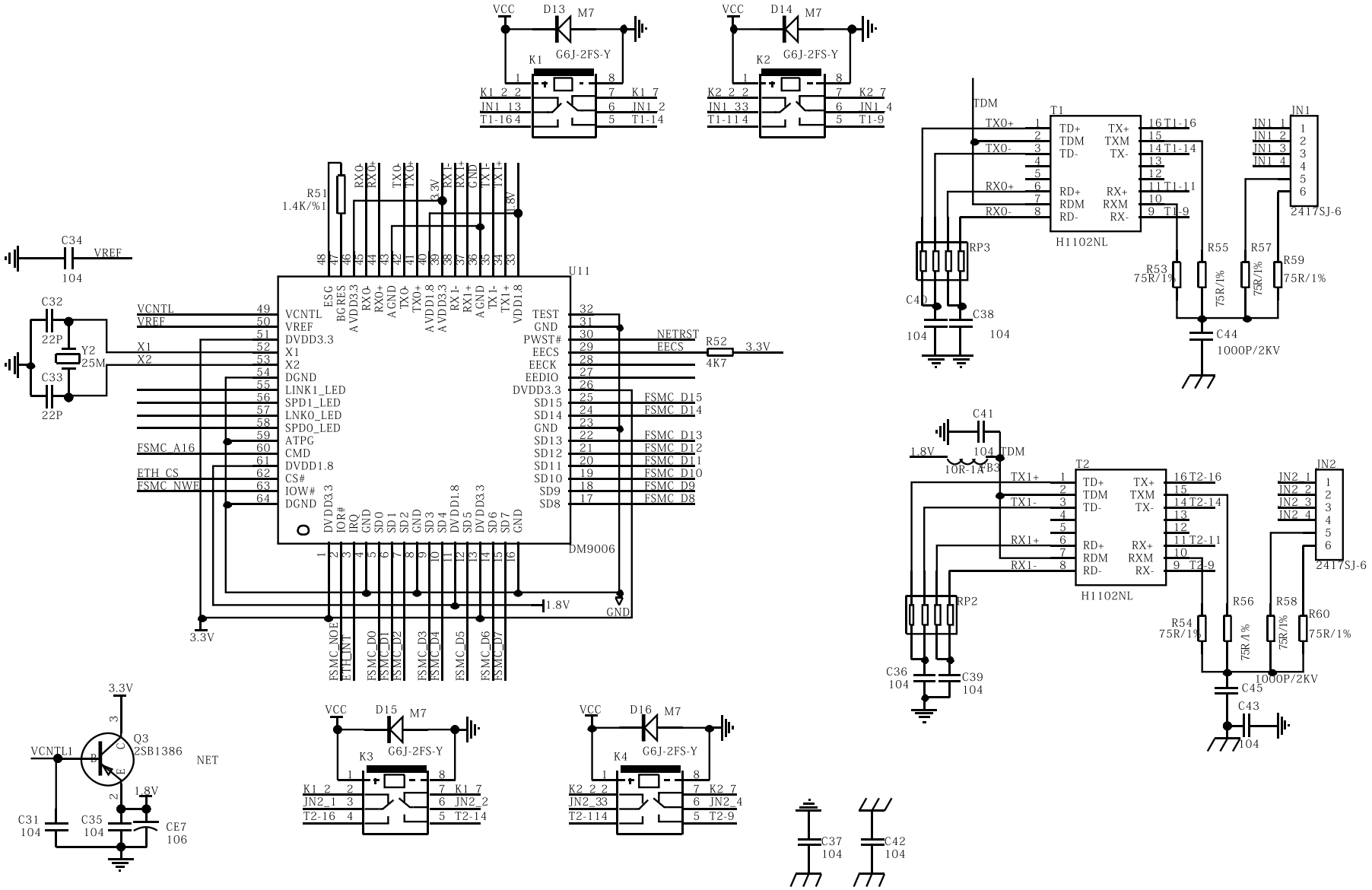

PRODUCT		**VLZ SPOT**			
PIC. NO.		PCB1428-0-B SCHEME (4/5)			
EDIT		FILE NO.	HY-WIEC-1698	PAGE NO.	23/56
CHECK		VERSION	NR	DATE	2018. 08. 07
APPROVE		ECN NO.		DATE	

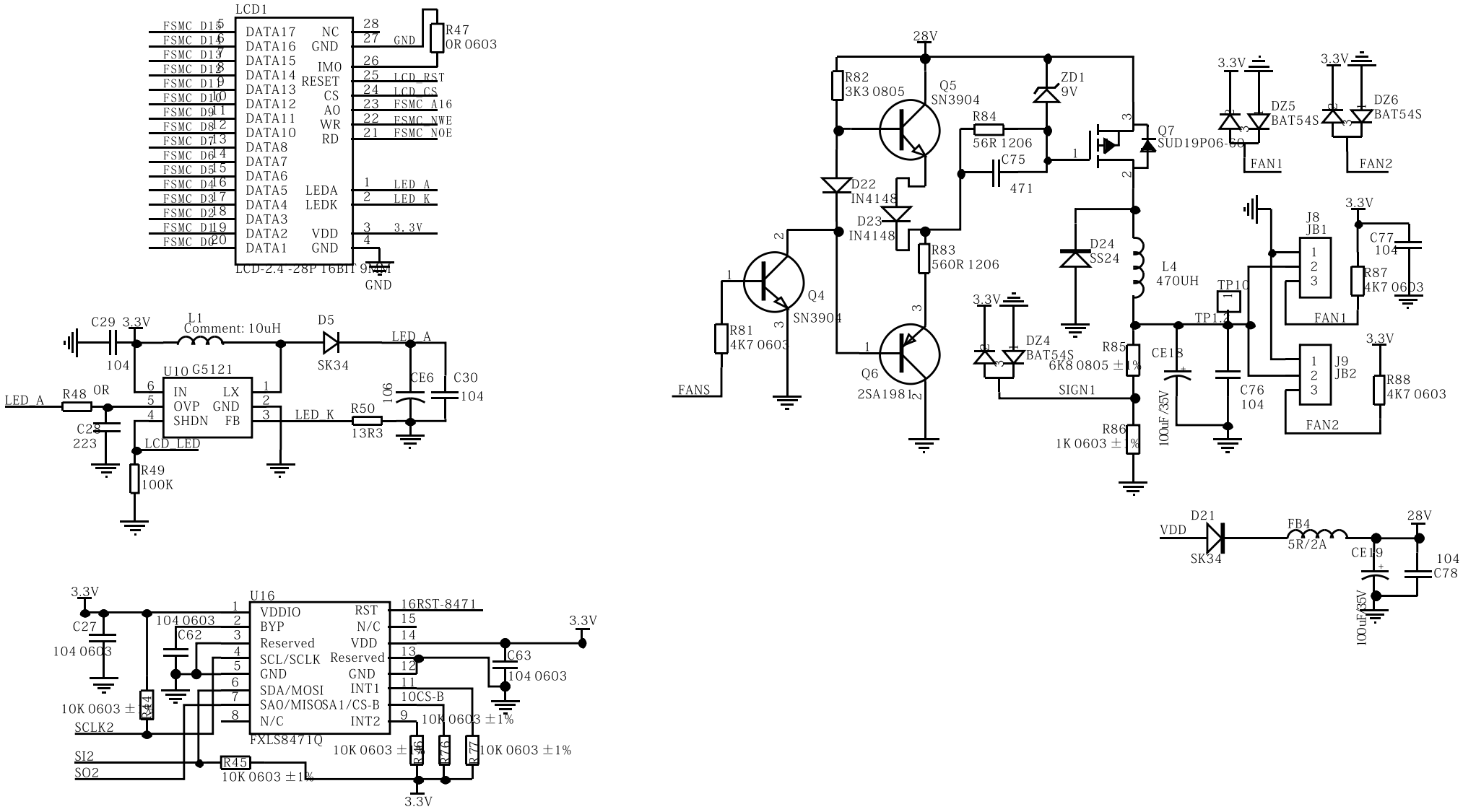

PRODUCT		**VLZ SPOT**			
PIC. NO.		PCB1428-0-B SCHEME (5/5)			
EDIT		FILE NO.	HY-WIEC-1698	PAGE NO.	24/56
CHECK		VERSION	NR	DATE	2018. 08. 07
APPROVE		ECN NO.		DATE	

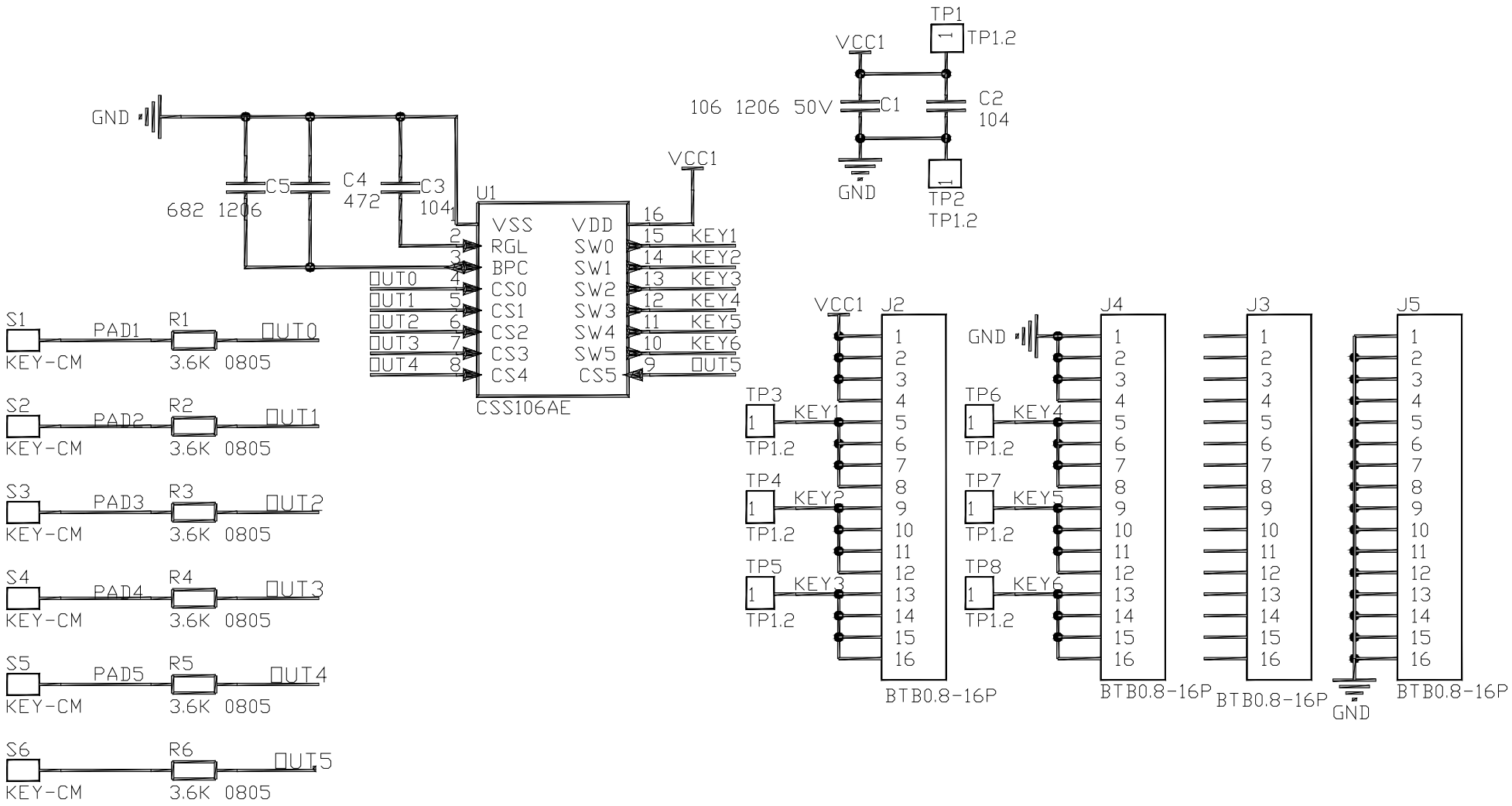

PRODUCT		**VLZ SPOT**			
PIC. NO.		PCB1471-0-A SCHEME			
EDIT		FILE NO.	HY-WIEC-1743	PAGE NO.	25/56
CHECK		VERSION	NR	DATE	2018. 08. 07
APPROVE		ECN NO.		DATE	

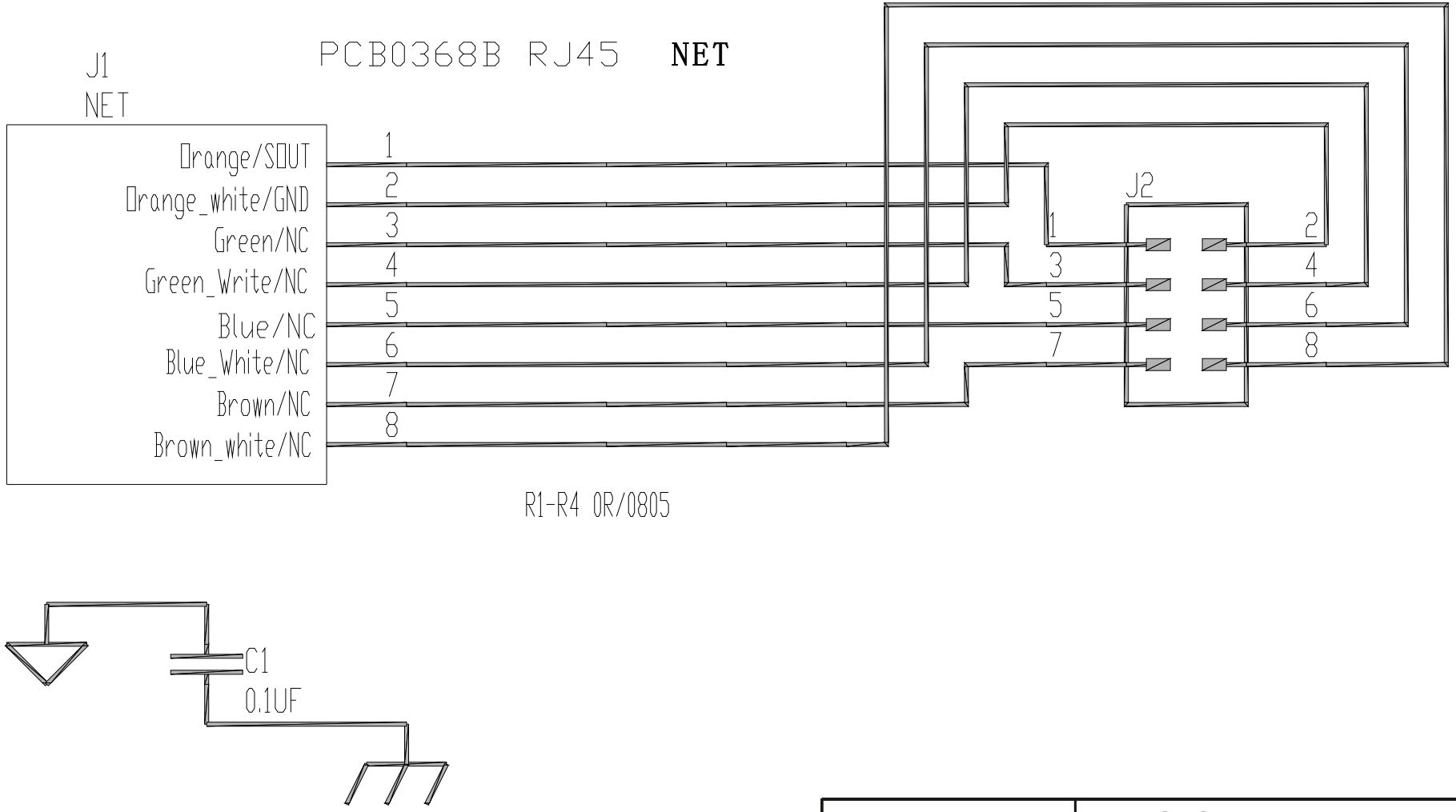

PRODUCT		VLZ SPOT			
PIC. NO.		PCB0368B SCHEME			
EDIT		FILE NO.	HY-WIEC-0480	PAGE NO.	26/56
CHECK		VERSION	NR	DATE	2018. 08. 07
APPROVE		ECN NO.		DATE	

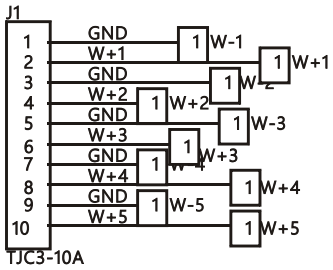

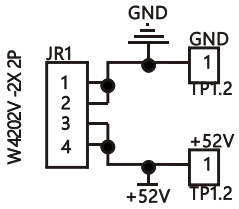

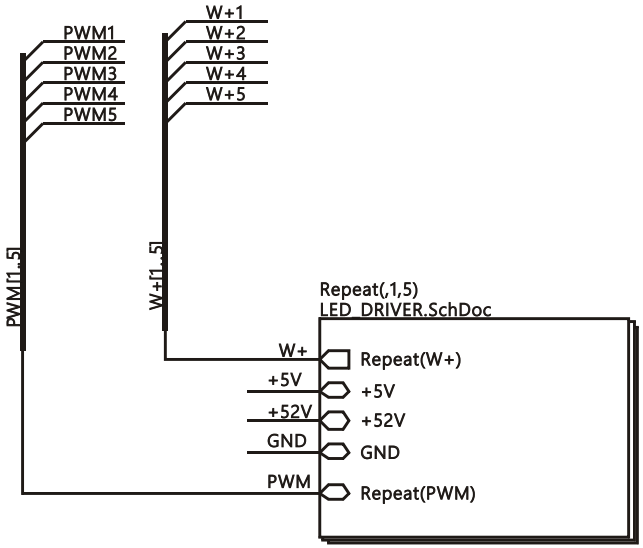

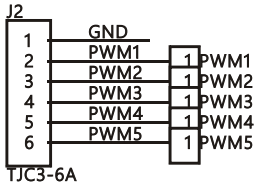

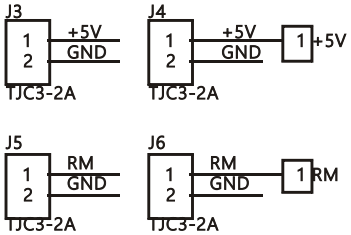

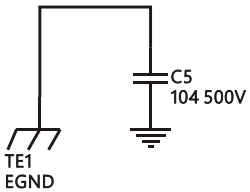

Circuit1	LED Array 5
Circuit2	LED Array 6
Circuit3	LED Array 7
Circuit4	LED Array 8
Circuit5	LED Array 9

PRODUCT		**VLZ SPOT**			
PIC. NO.		PCB1433-0-A SCHEME (1/6)			
EDIT		FILE NO.	HY-WIEC-1766	PAGE NO.	27/56
CHECK		VERSION	NR	DATE	2018. 08. 07
APPROVE		ECN NO.		DATE	

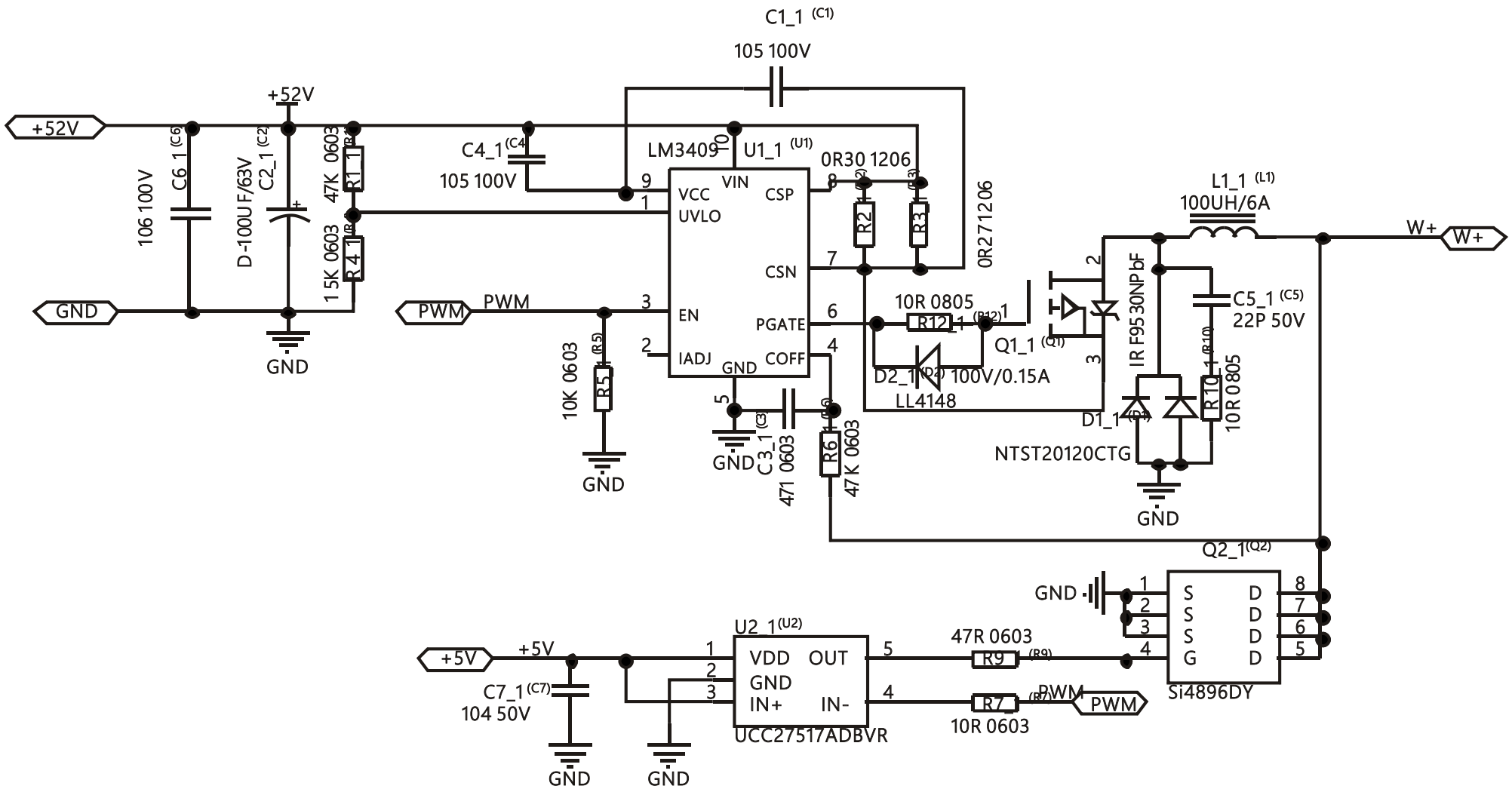

PRODUCT		VLZ SPOT			
PIC. NO.		PCB1433-0-A SCHEME (2/6)			
EDIT		FILE NO.	HY-WIEC-1766	PAGE NO.	28/56
CHECK		VERSION	NR	DATE	2018. 08. 07
APPROVE		ECN NO.		DATE	

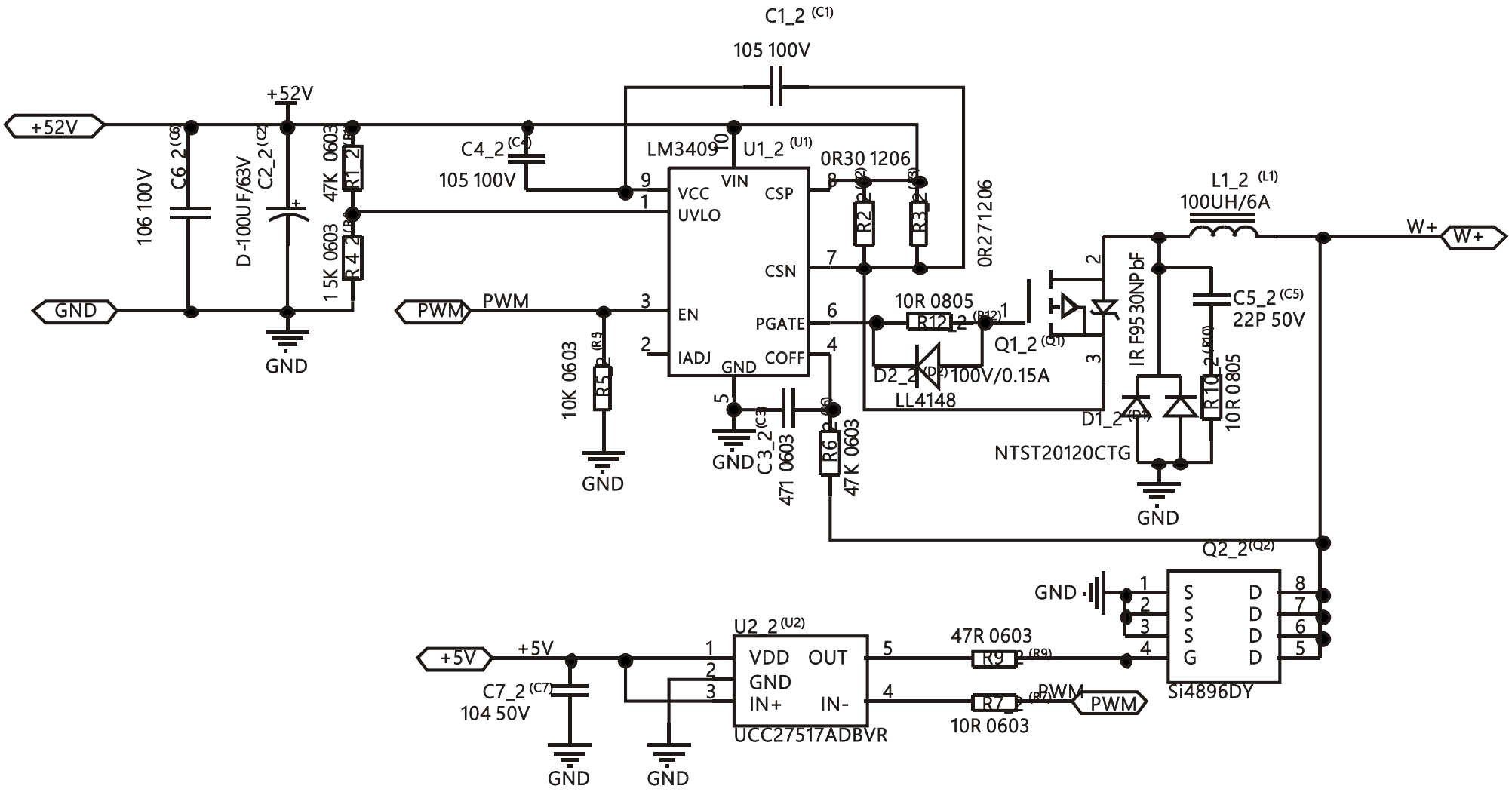

PRODUCT		VLZ SPOT			
PIC. NO.		PCB1433-0-A SCHEME (3/6)			
EDIT		FILE NO.	HY-WIEC-1766	PAGE NO.	29/56
CHECK		VERSION	NR	DATE	2018. 08. 07
APPROVE		ECN NO.		DATE	

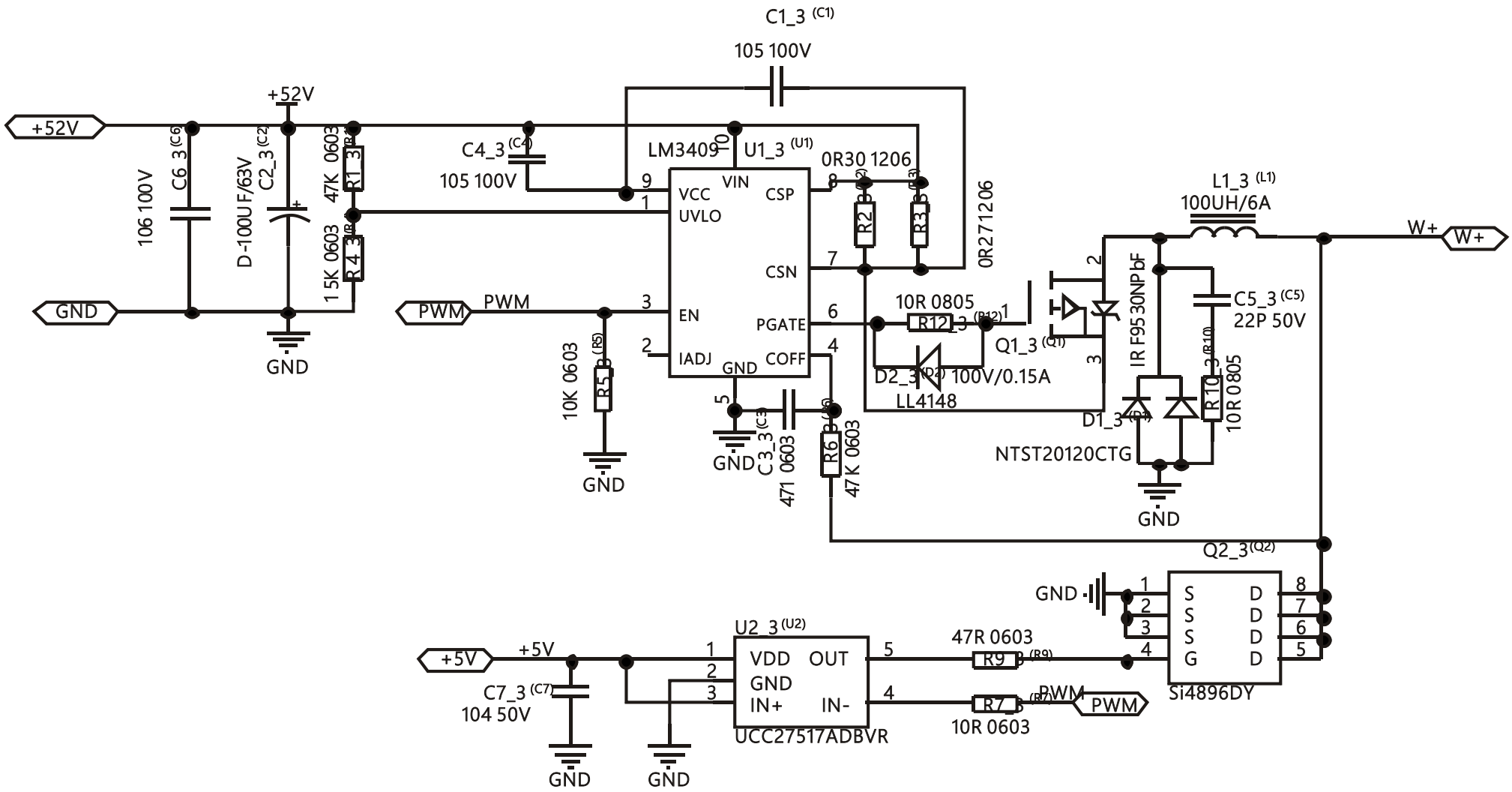

PRODUCT		VLZ SPOT			
PIC. NO.		PCB1433-0-A SCHEME (4/6)			
EDIT		FILE NO.	HY-WIEC-1766	PAGE NO.	30/56
CHECK		VERSION	NR	DATE	2018. 08. 07
APPROVE		ECN NO.		DATE	

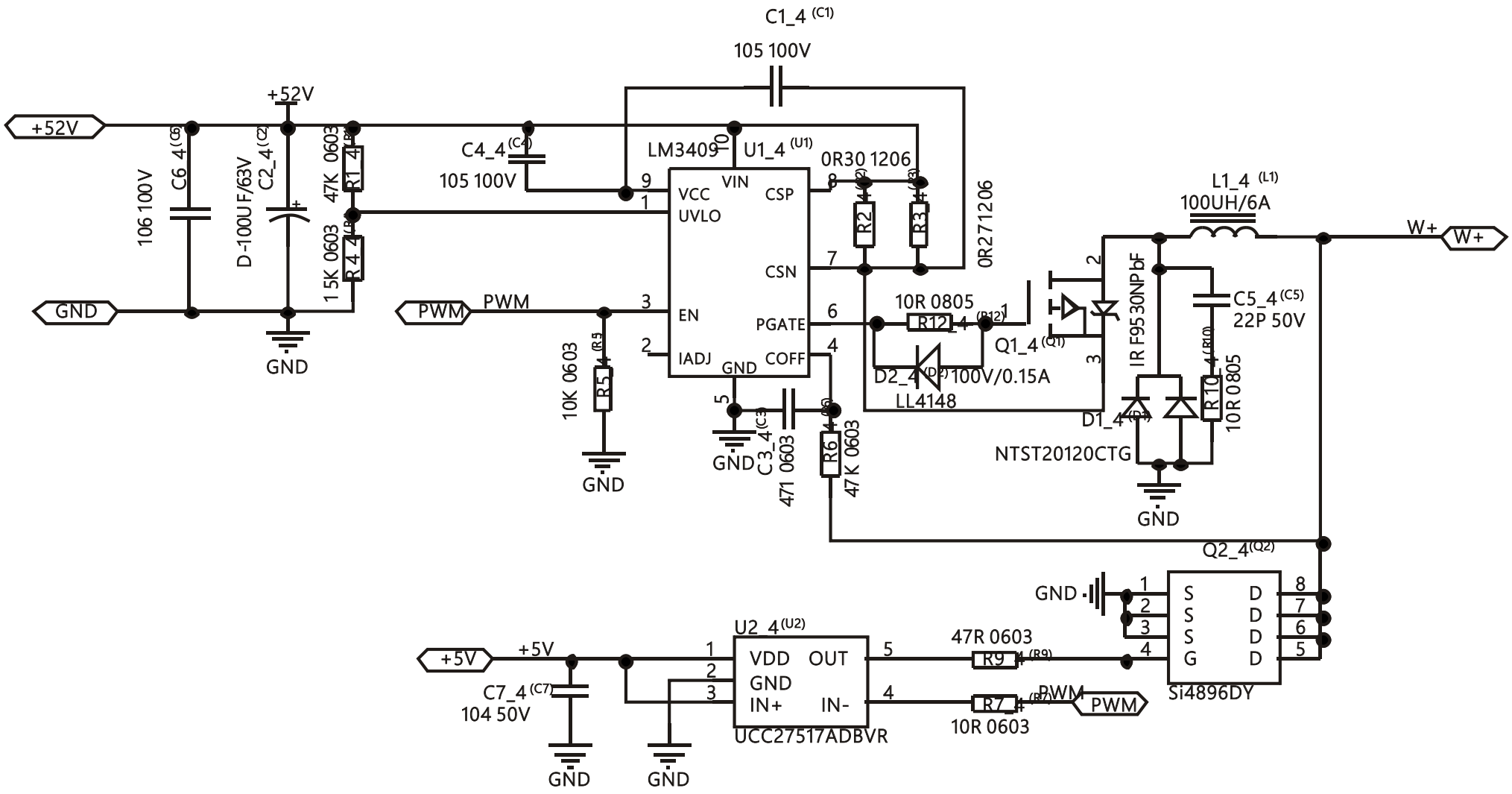

PRODUCT		VLZ SPOT			
PIC. NO.		PCB1433-0-A SCHEME (5/6)			
EDIT		FILE NO.	HY-WIEC-1766	PAGE NO.	31/56
CHECK		VERSION	NR	DATE	2018. 08. 07
APPROVE		ECN NO.		DATE	

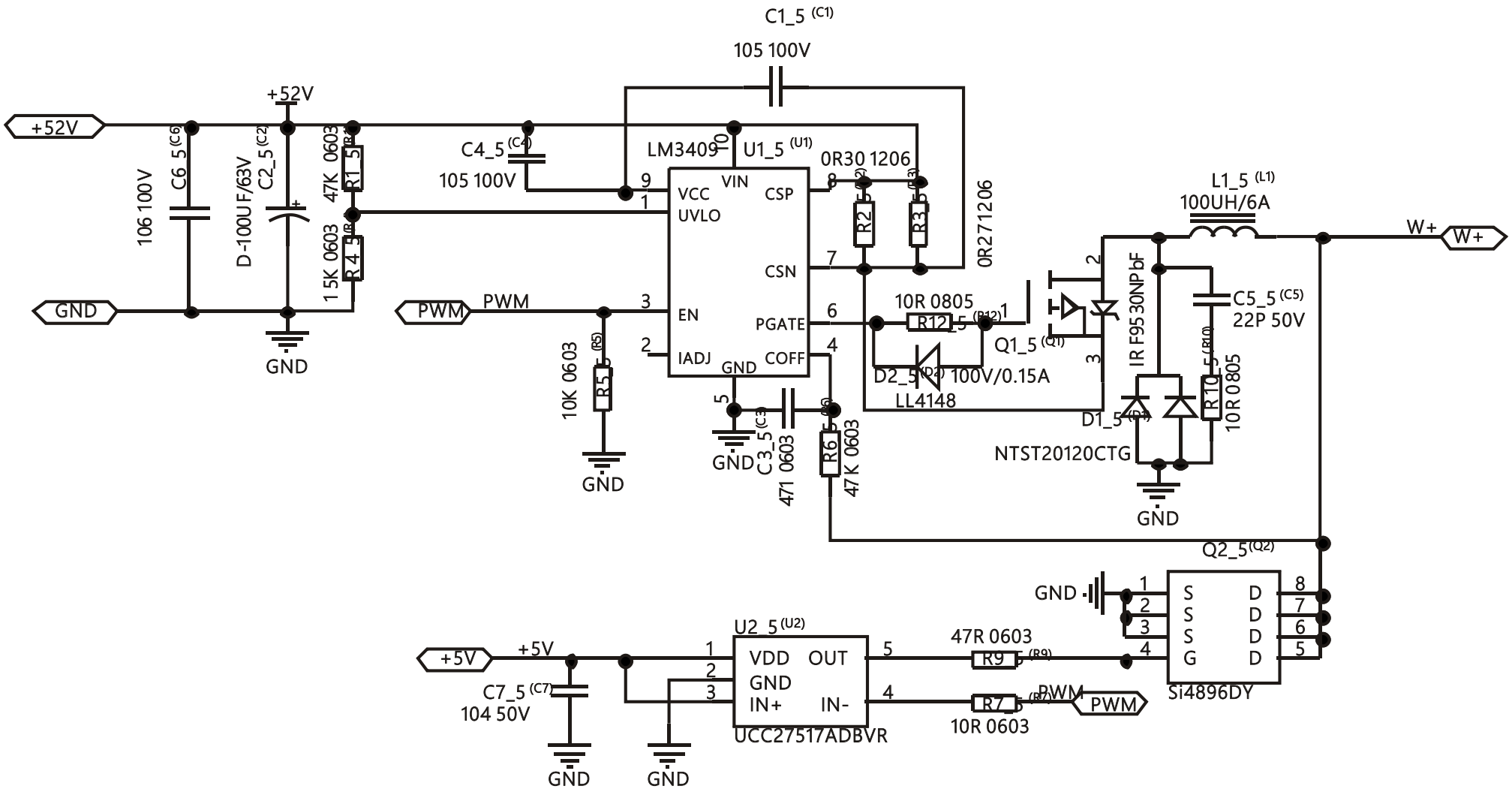

PRODUCT		VLZ SPOT			
PIC. NO.		PCB1433-0-A SCHEME (6/6)			
EDIT		FILE NO.	HY-WIEC-1766	PAGE NO.	32/56
CHECK		VERSION	NR	DATE	2018. 08. 07
APPROVE		ECN NO.		DATE	

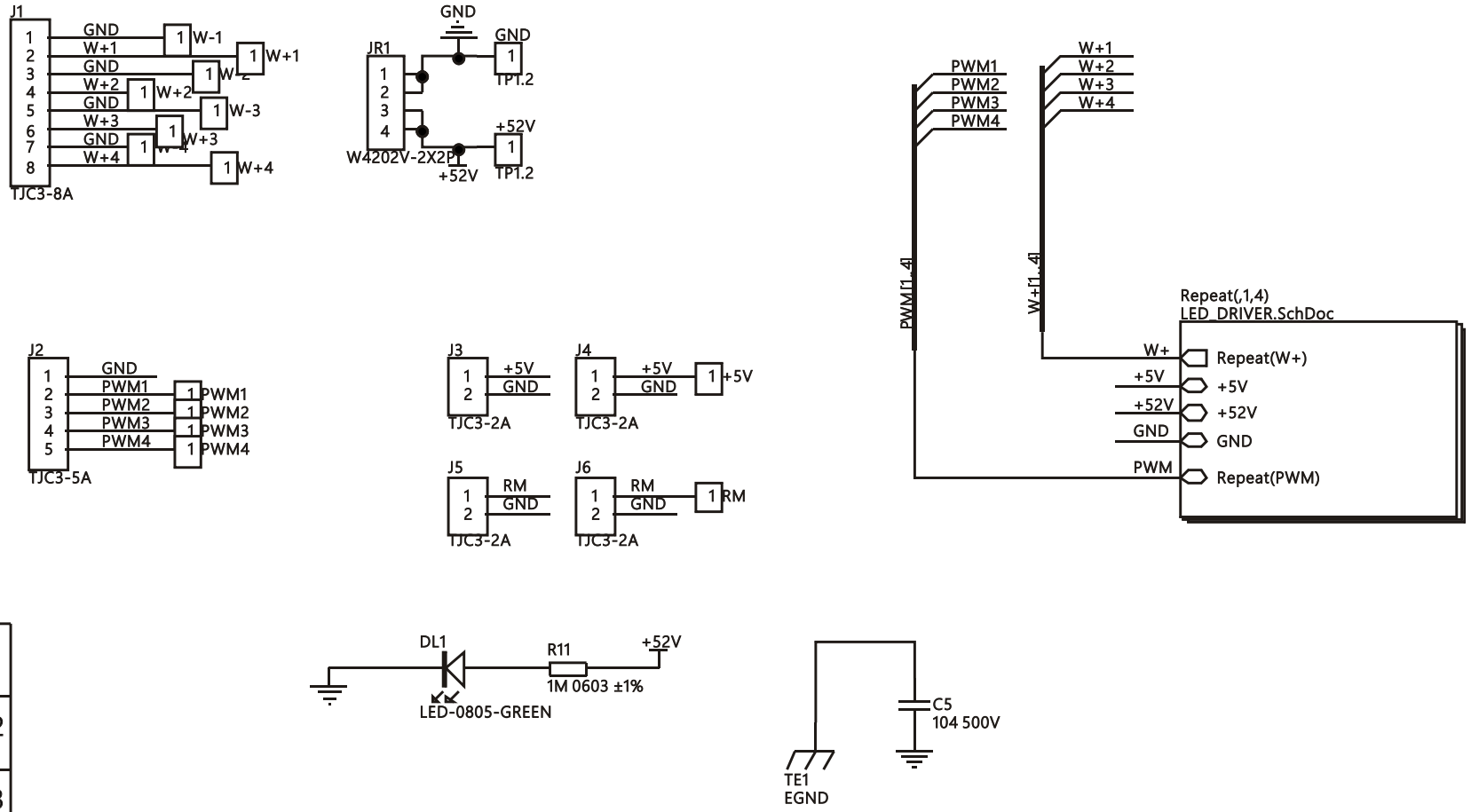

Circuit1	LED Array 1
Circuit2	LED Array 2
Circuit3	LED Array 3
Circuit4	LED Array 4

PRODUCT		VLZ SPOT			
PIC. NO.		PCB1405-0-B SCHEME (1/5)			
EDIT		FILE NO.	HY-WIEC-1689	PAGE NO.	33/56
CHECK		VERSION	NR	DATE	2018. 08. 07
APPROVE		ECN NO.		DATE	

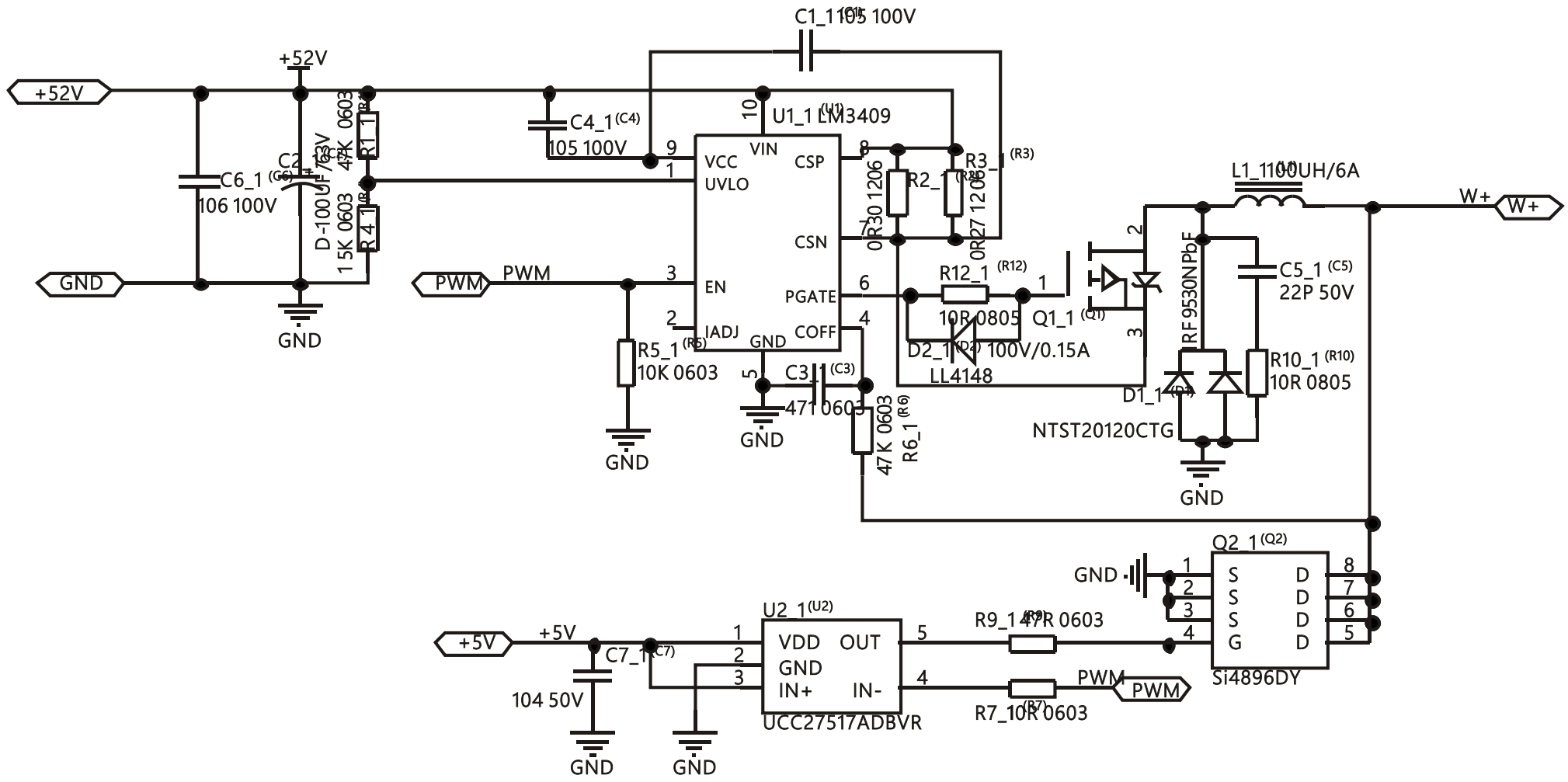

PRODUCT		VLZ SPOT			
PIC. NO.		PCB1405-0-B SCHEME (2/5)			
EDIT		FILE NO.	HY-WIEC-1689	PAGE NO.	34/56
CHECK		VERSION	NR	DATE	2018. 08. 07
APPROVE		ECN NO.		DATE	

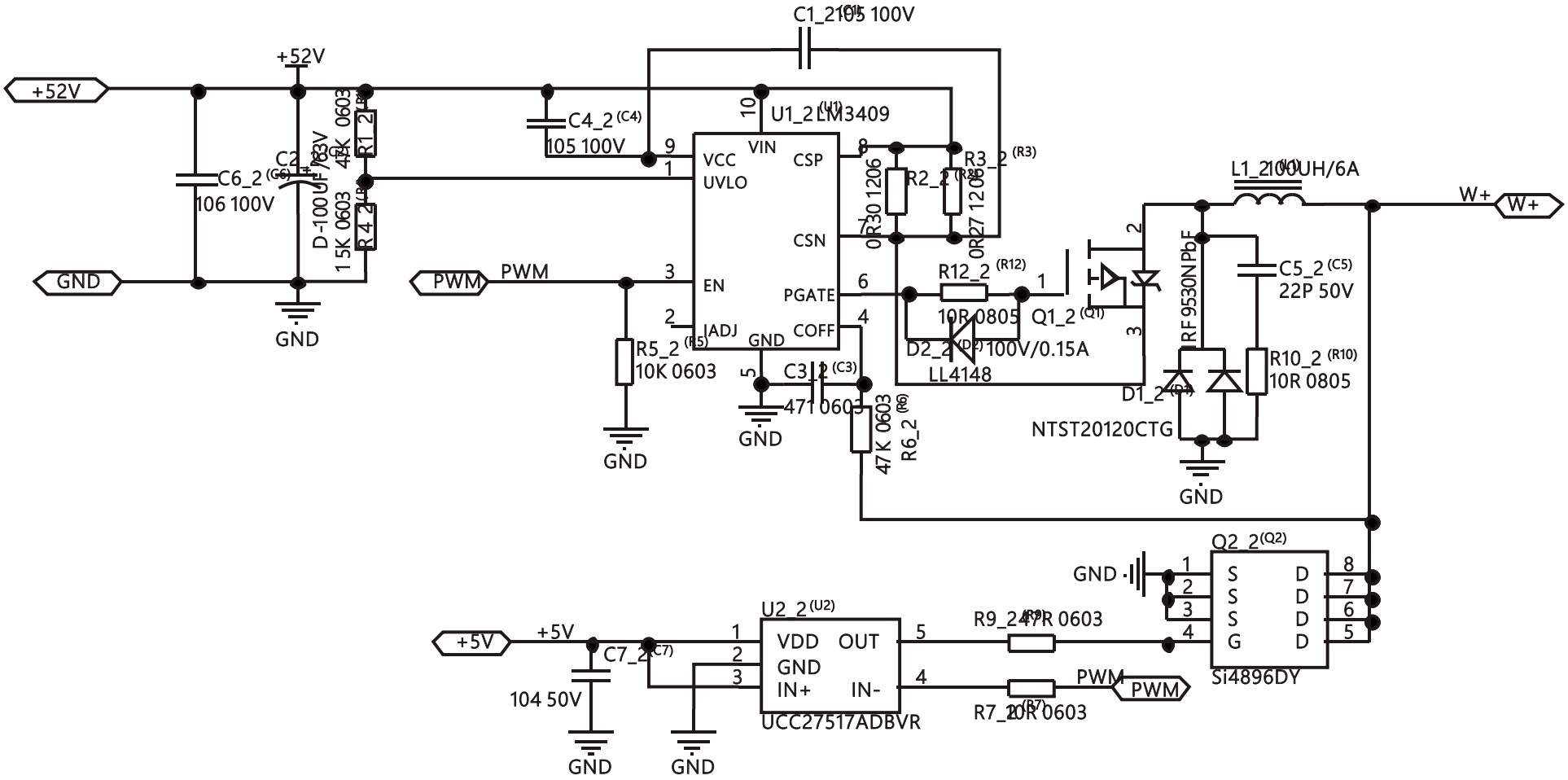

PRODUCT		VLZ SPOT			
PIC. NO.		PCB1405-0-B SCHEME (3/5)			
EDIT		FILE NO.	HY-WIEC-1689	PAGE NO.	35/56
CHECK		VERSION	NR	DATE	2018. 08. 07
APPROVE		ECN NO.		DATE	

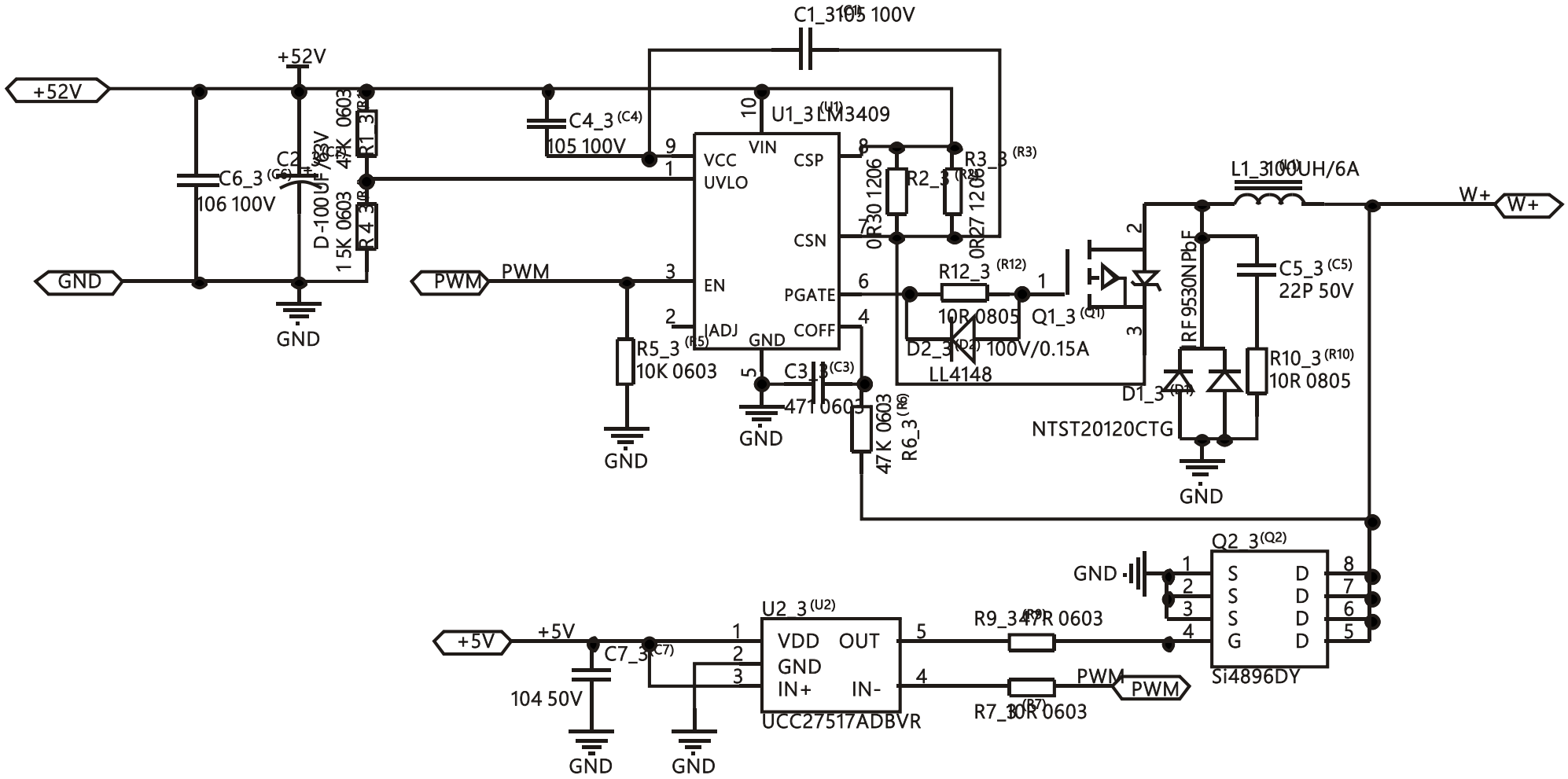

PRODUCT		VLZ SPOT			
PIC. NO.		PCB1405-0-B SCHEME (4/5)			
EDIT		FILE NO.	HY-WIEC-1689	PAGE NO.	36/56
CHECK		VERSION	NR	DATE	2018. 08. 07
APPROVE		ECN NO.		DATE	

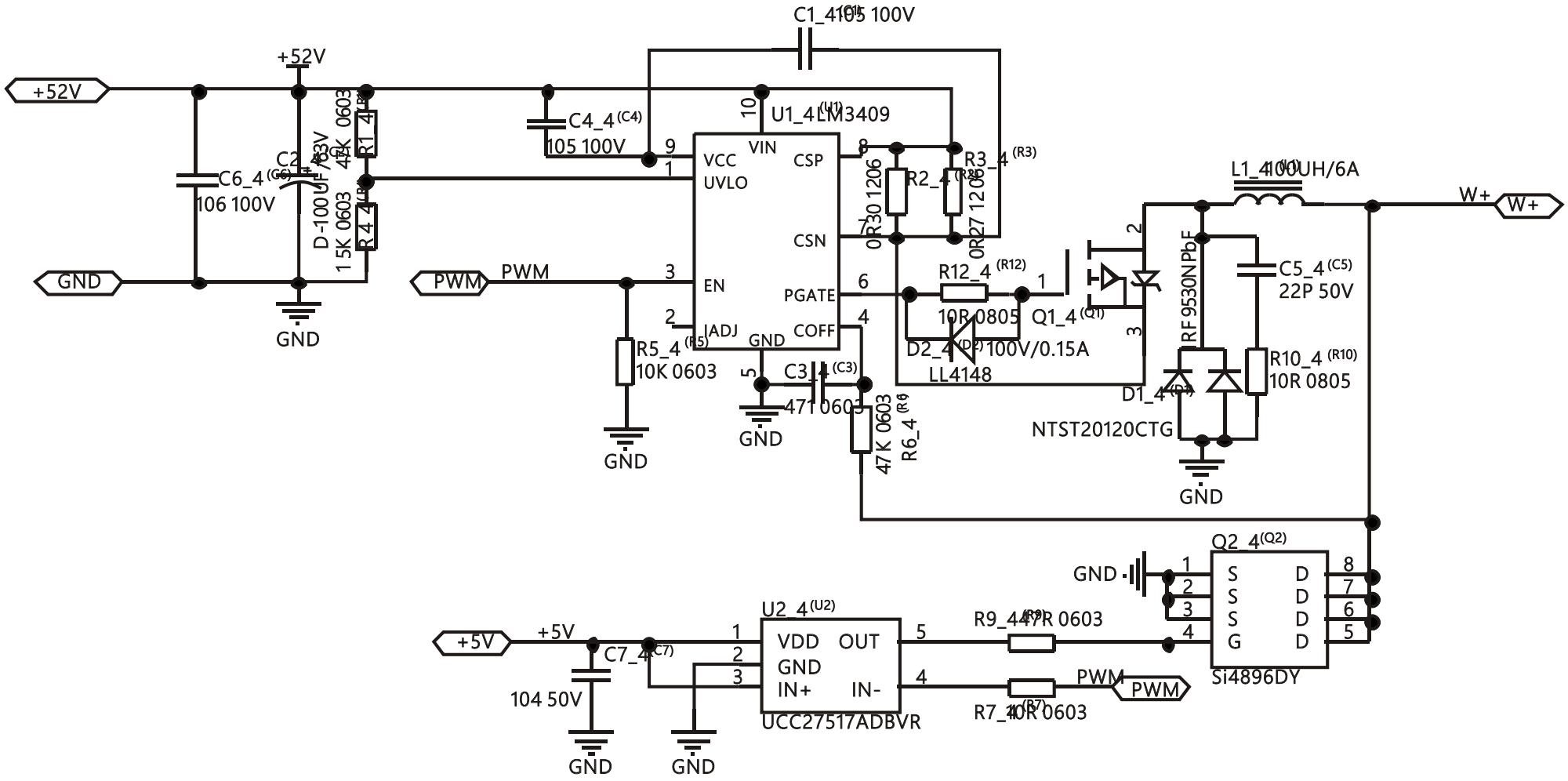

PRODUCT		VLZ SPOT			
PIC. NO.		PCB1405-0-B SCHEME (5/5)			
EDIT		FILE NO.	HY-WIEC-1689	PAGE NO.	37/56
CHECK		VERSION	NR	DATE	2018. 08. 07
APPROVE		ECN NO.		DATE	

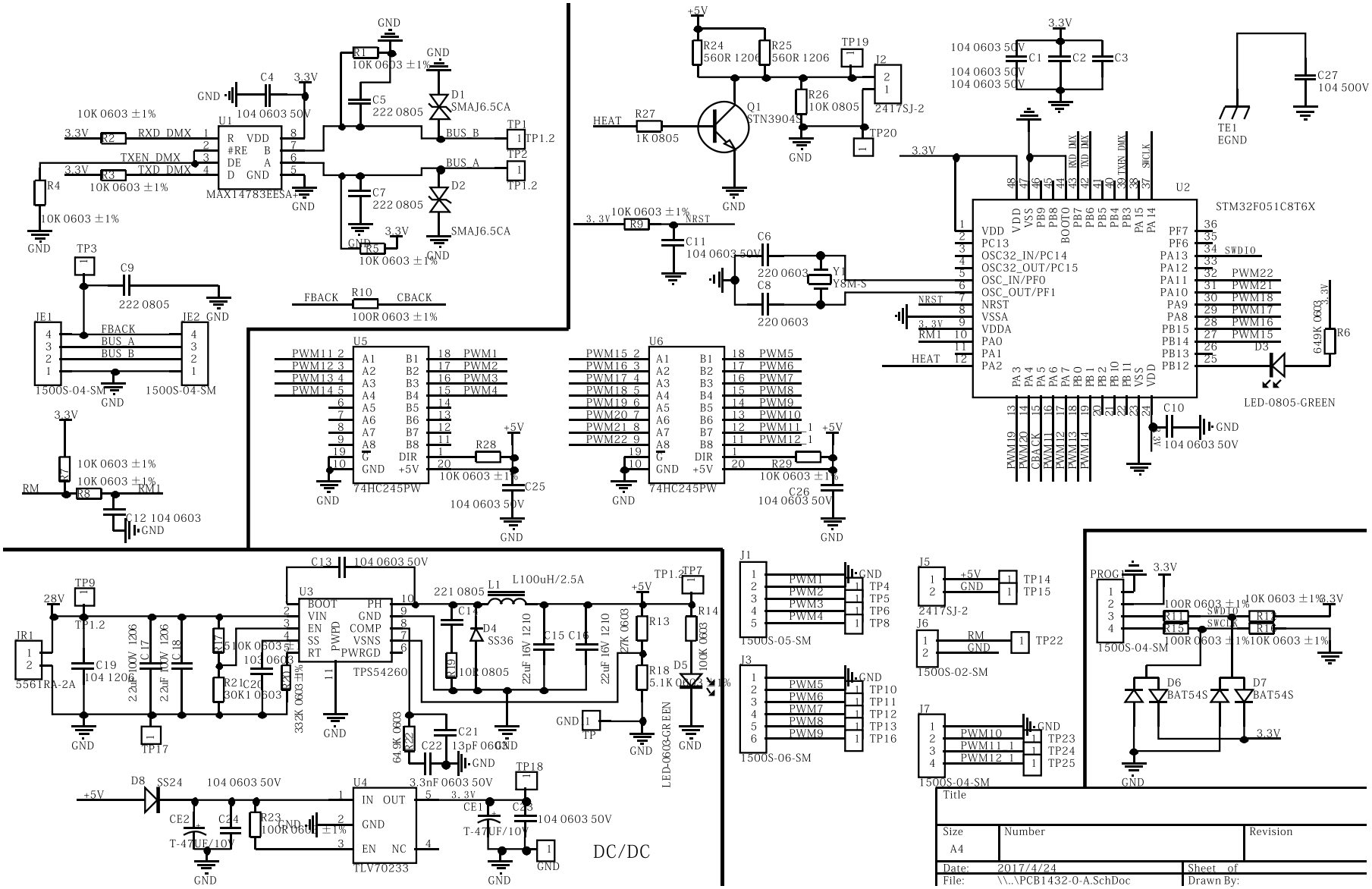

PRODUCT		VLZ SPOT			
PIC. NO.		PCB1432-0-A SCHEME			
EDIT		FILE NO.	HY-WIEC-1765	PAGE NO.	38/56
CHECK		VERSION	NR	DATE	2018. 08. 07
APPROVE		ECN NO.		DATE	

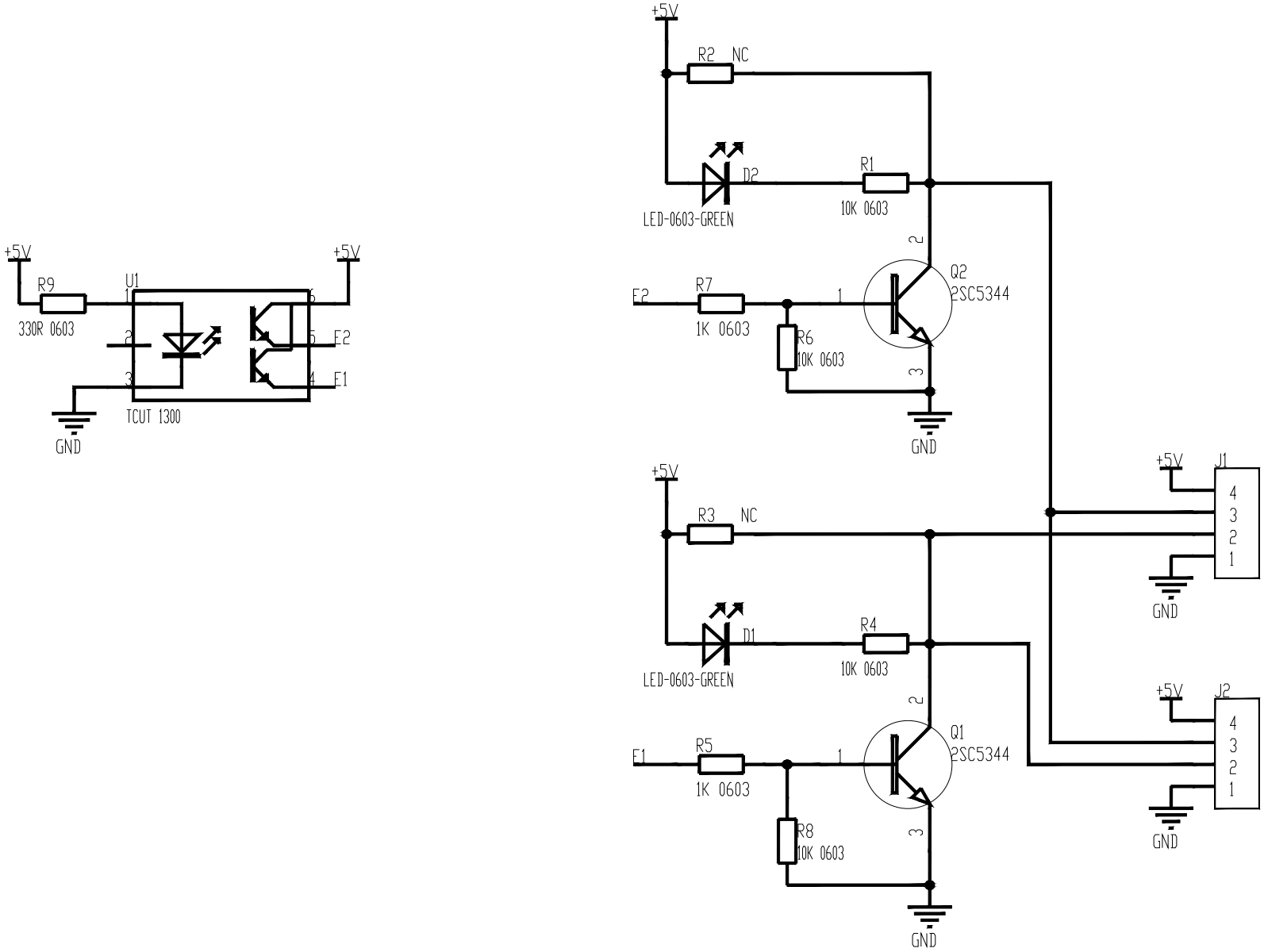

PRODUCT		**VLZ SPOT**			
PIC. NO.		PCB1102-0-B SCHEME			
EDIT		FILE NO.	HY-WIEC-1354	PAGE NO.	39/56
CHECK		VERSION	NR	DATE	2018. 08. 07
APPROVE		ECN NO.		DATE	

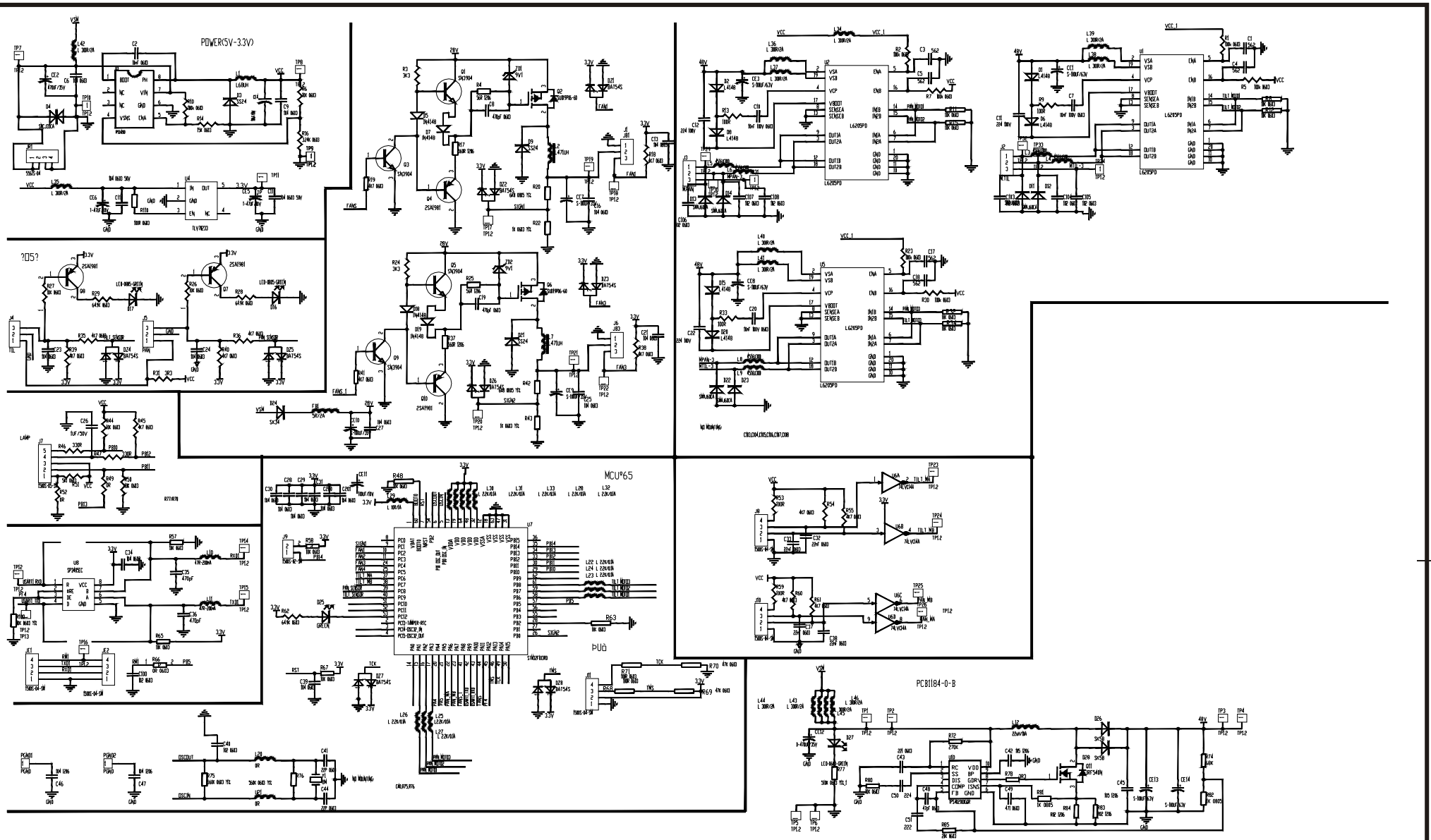

PRODUCT		VLZ SPOT			
PIC. NO.		PCB1346-0-C SCHEME			
EDIT		FILE NO.	HY-WIEC-1600	PAGE NO.	40/56
CHECK		VERSION	NR	DATE	2018. 08. 07
APPROVE		ECN NO.		DATE	

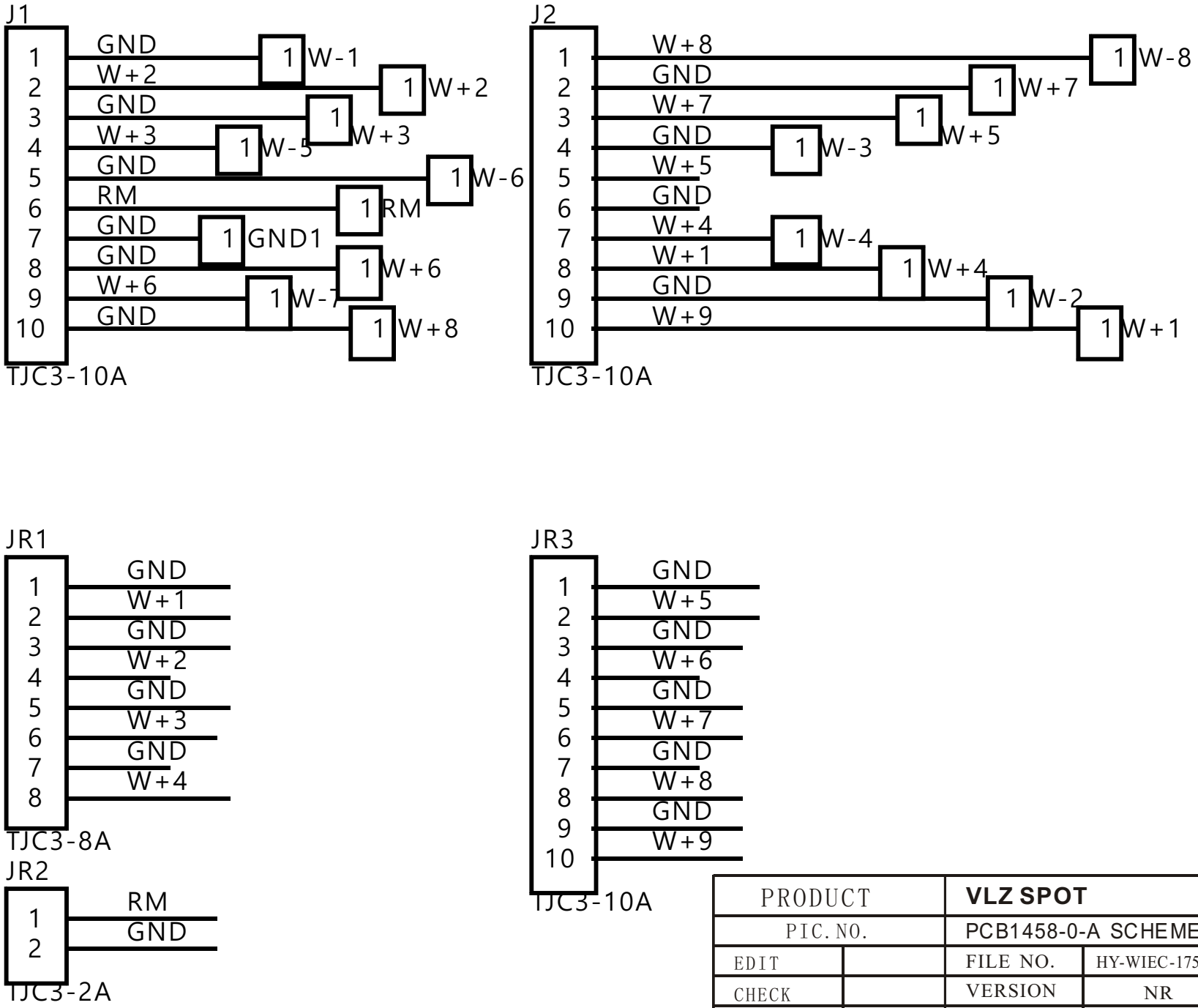

PRODUCT		VLZ SPOT			
PIC. NO.		PCB1458-0-A SCHEME			
EDIT		FILE NO.	HY-WIEC-1755	PAGE NO.	41/56
CHECK		VERSION	NR	DATE	2018. 08. 07
APPROVE		ECN NO.		DATE	

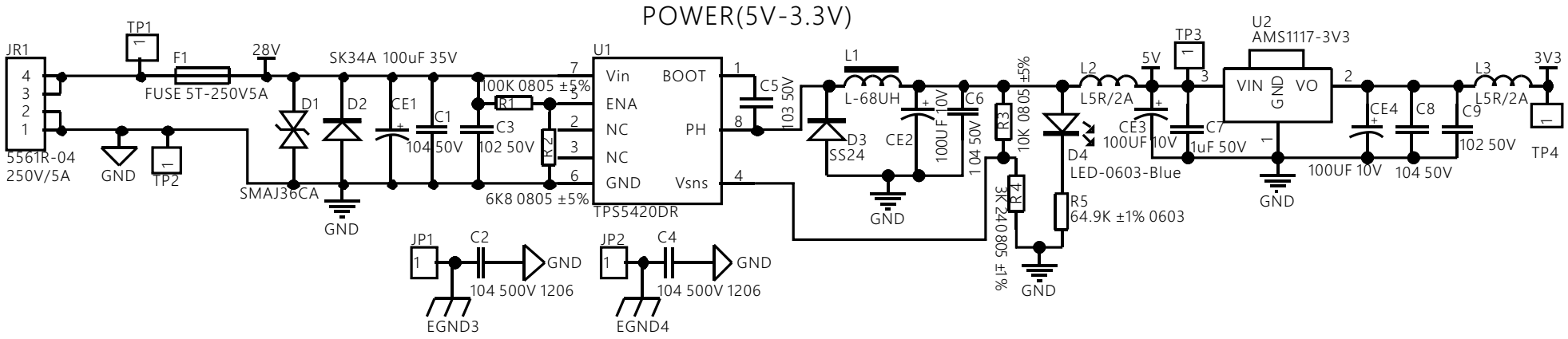

PRODUCT		VLZ SPOT			
PIC. NO.		PCB1451-0-B SCHEME (1/6)			
EDIT		FILE NO.	HY-WIEC-1761	PAGE NO.	42/56
CHECK		VERSION	NR	DATE	2018. 08. 07
APPROVE		ECN NO.		DATE	

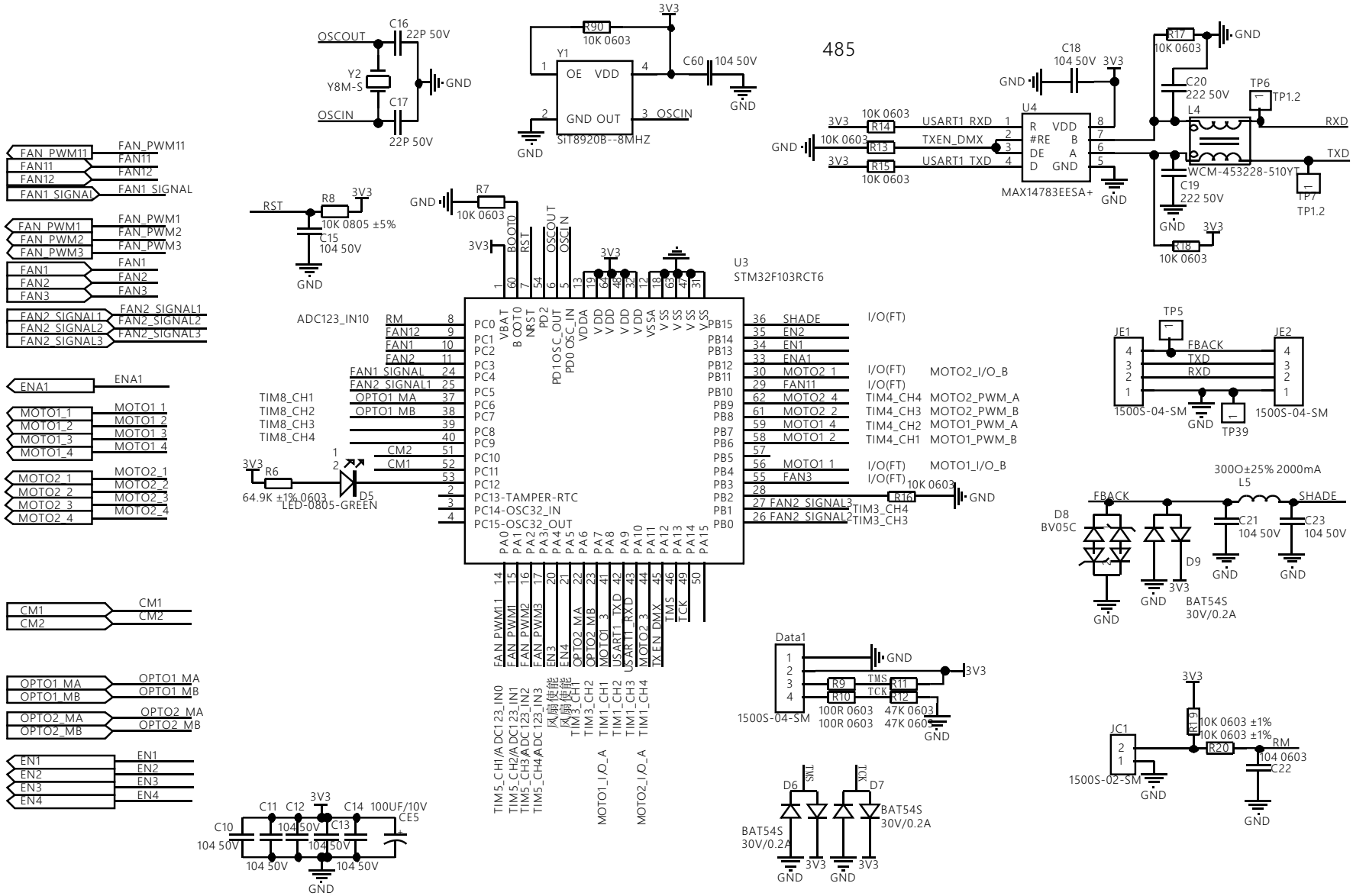

PRODUCT		VLZ SPOT			
PIC. NO.		PCB1451-0-B SCHEME (2/6)			
EDIT		FILE NO.	HY-WIEC-1761	PAGE NO.	43/56
CHECK		VERSION	NR	DATE	2018. 08. 07
APPROVE		ECN NO.		DATE	

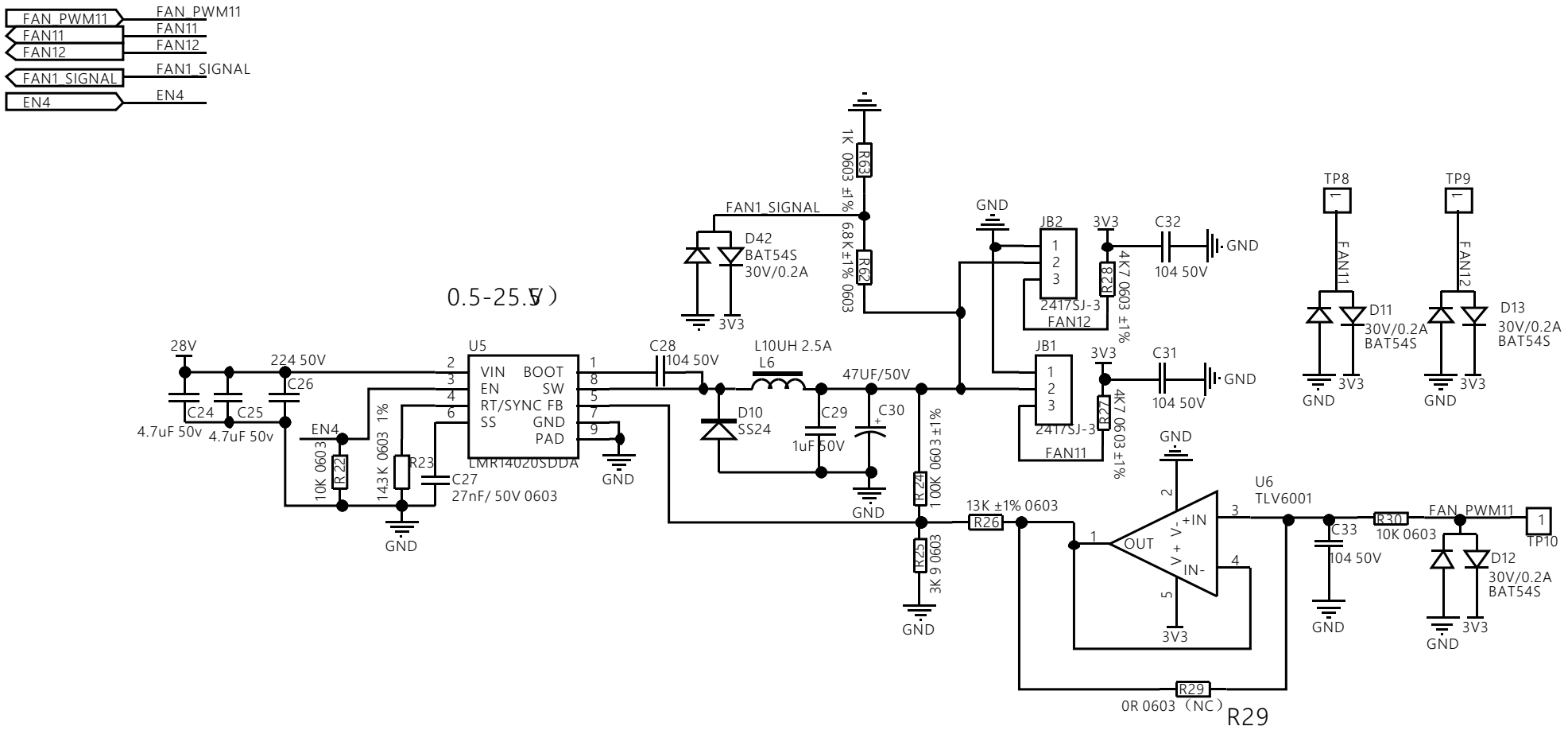

PRODUCT		VLZ SPOT			
PIC. NO.		PCB1451-0-B SCHEME (3/6)			
EDIT		FILE NO.	HY-WIEC-1761	PAGE NO.	44/56
CHECK		VERSION	NR	DATE	2018. 08. 07
APPROVE		ECN NO.		DATE	

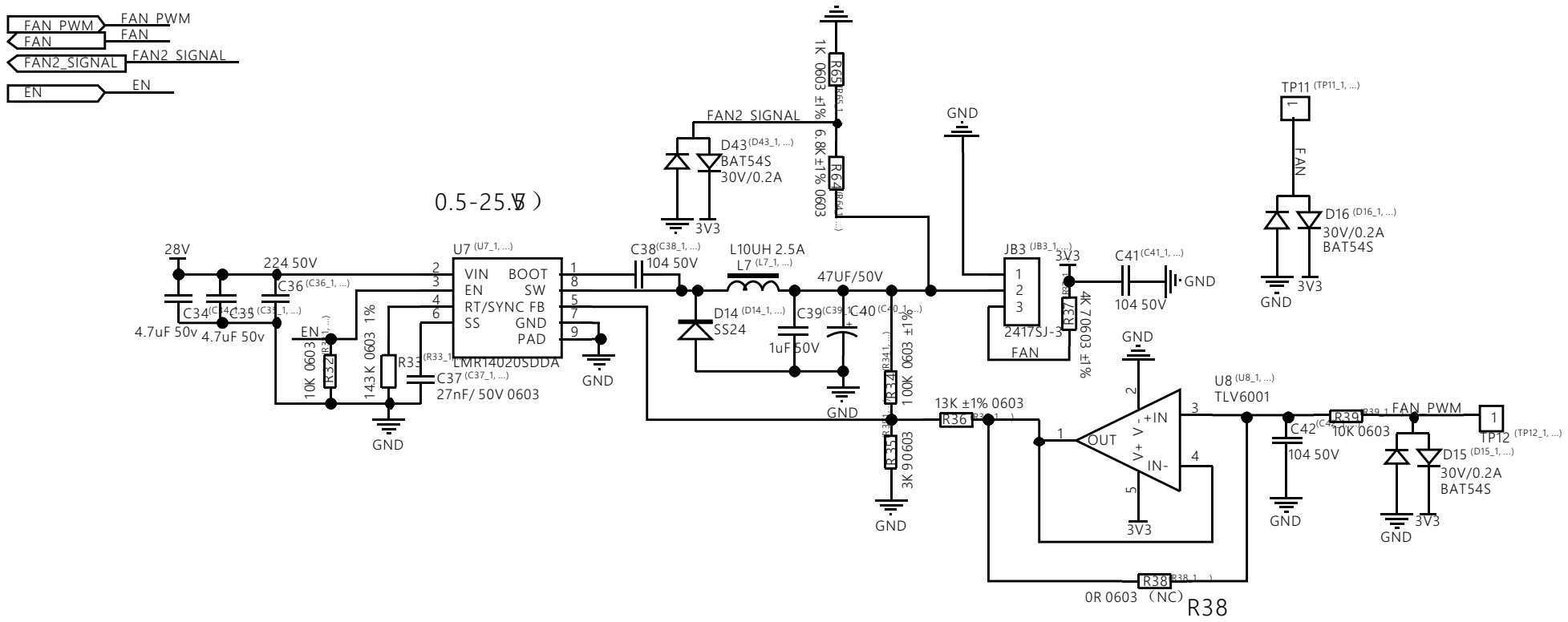

PRODUCT		VLZ SPOT			
PIC. NO.		PCB1451-0-B SCHEME (4/6)			
EDIT		FILE NO.	HY-WIEC-1761	PAGE NO.	45/56
CHECK		VERSION	NR	DATE	2018. 08. 07
APPROVE		ECN NO.		DATE	

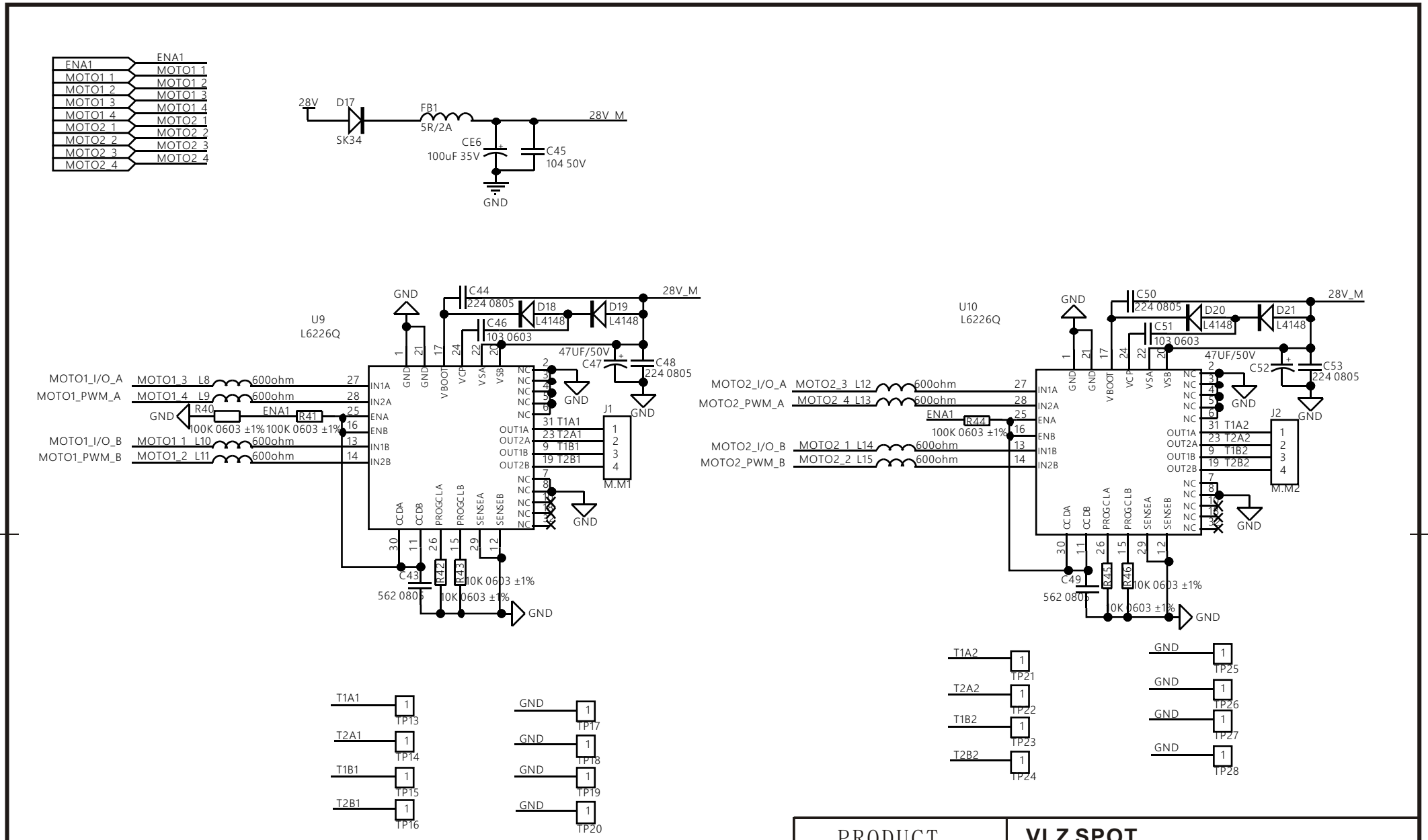

PRODUCT		**VLZ SPOT**			
PIC. NO.		PCB1451-0-B SCHEME (5/6)			
EDIT		FILE NO.	HY-WIEC-1761	PAGE NO.	46/56
CHECK		VERSION	NR	DATE	2018. 08. 07
APPROVE		ECN NO.		DATE	

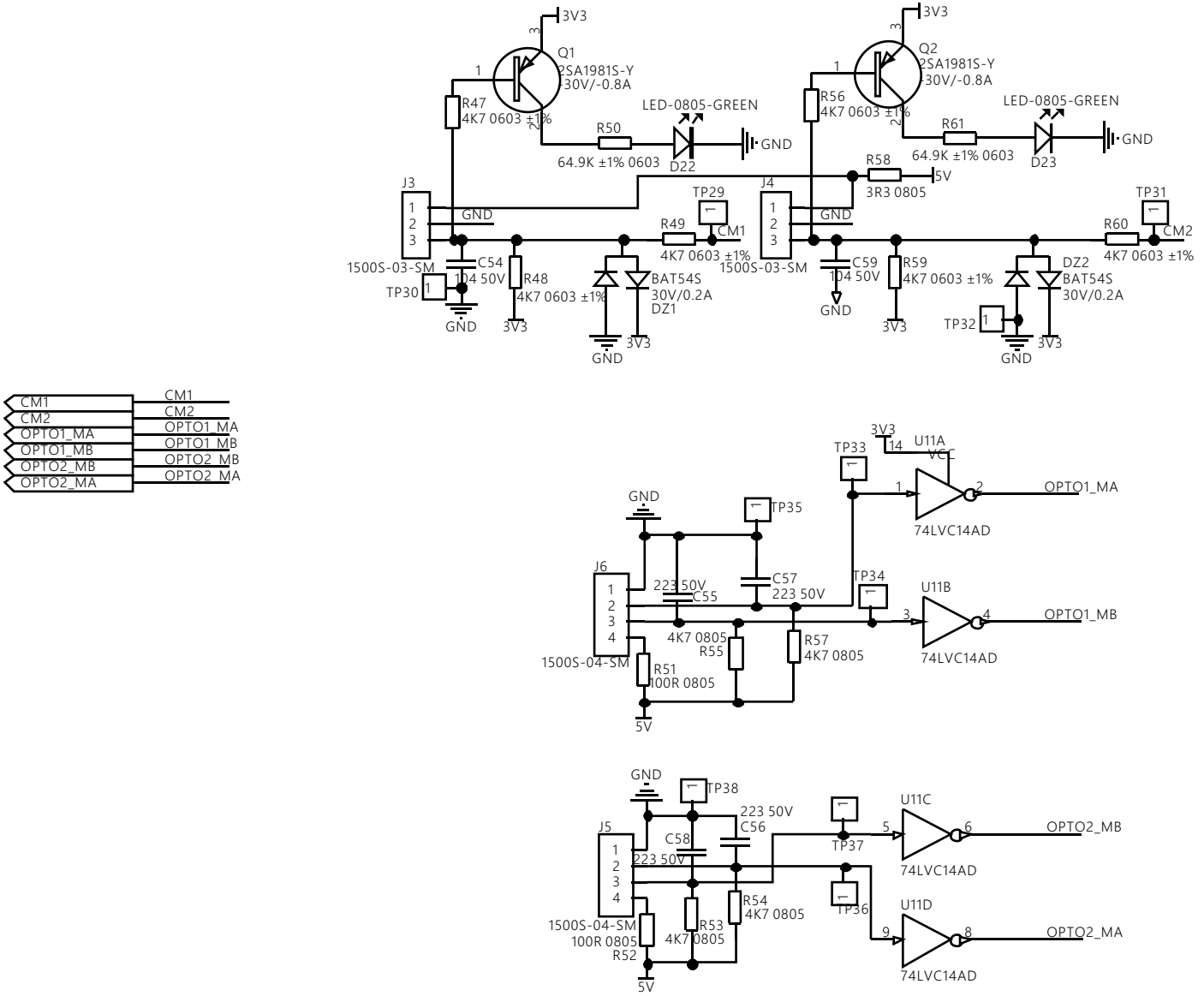

PRODUCT		VLZ SPOT			
PIC. NO.		PCB1451-0-B SCHEME (6/6)			
EDIT		FILE NO.	HY-WIEC-1761	PAGE NO.	47/56
CHECK		VERSION	NR	DATE	2018. 08. 07
APPROVE		ECN NO.		DATE	

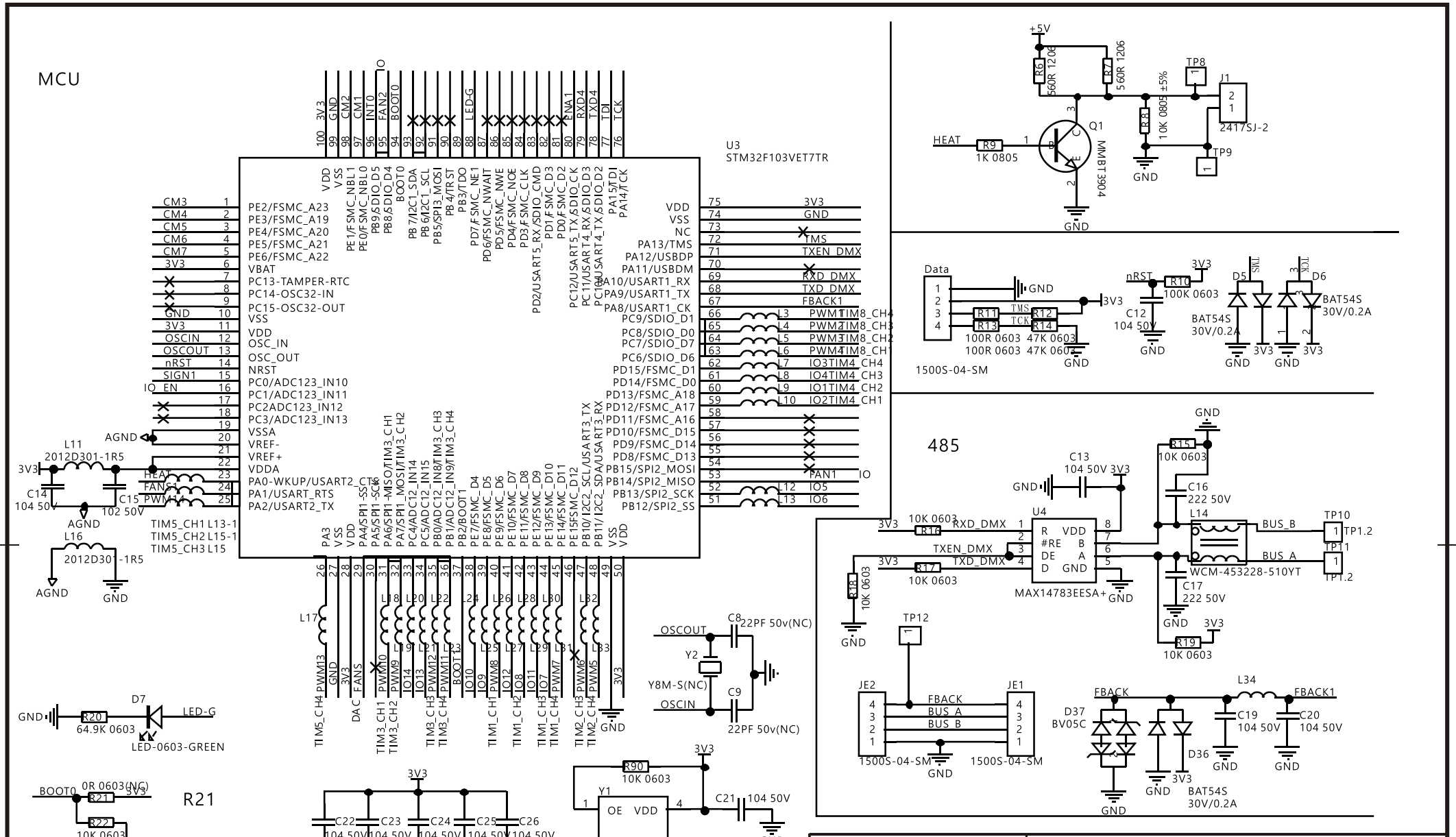
MCU
U3
STM32F103VET7TR
485
MAX14783EESA+
WCM-453228-510YT
1500S-04-SM
SIT8920B--8MHZ
LED-0603-GREEN
BAT54S
30V/0.2A
2417SJ-2
MMBT3904
R21
0R 0603(NC)
PRODUCT
VLZ SPOT
PIC. NO.
PCB1499-0-B SCHEME (1/3)
EDIT
FILE NO.
HY-WIEC-1906
PAGE NO.
48/56
CHECK
VERSION
NR
DATE
2018. 08. 07
APPROVE
ECN NO.
DATE

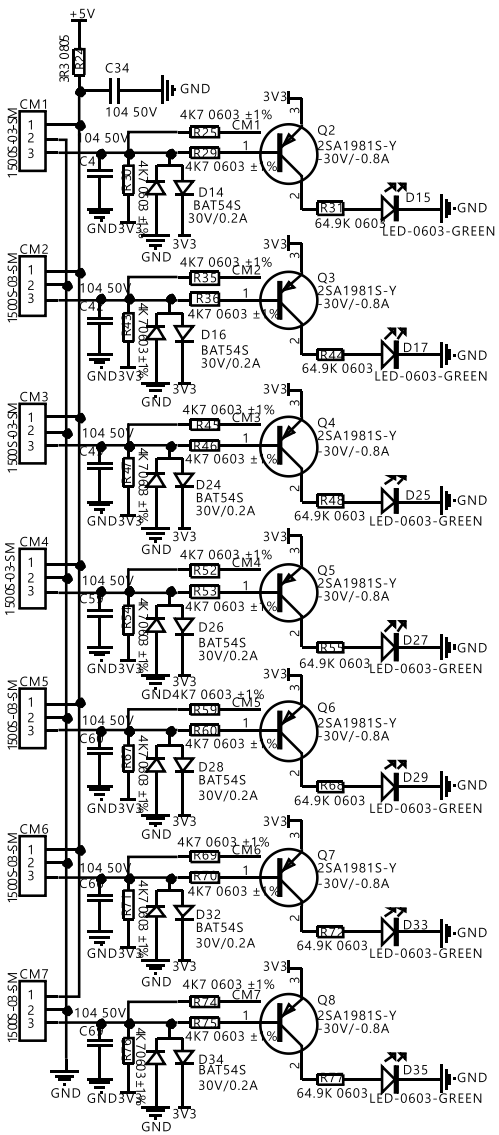

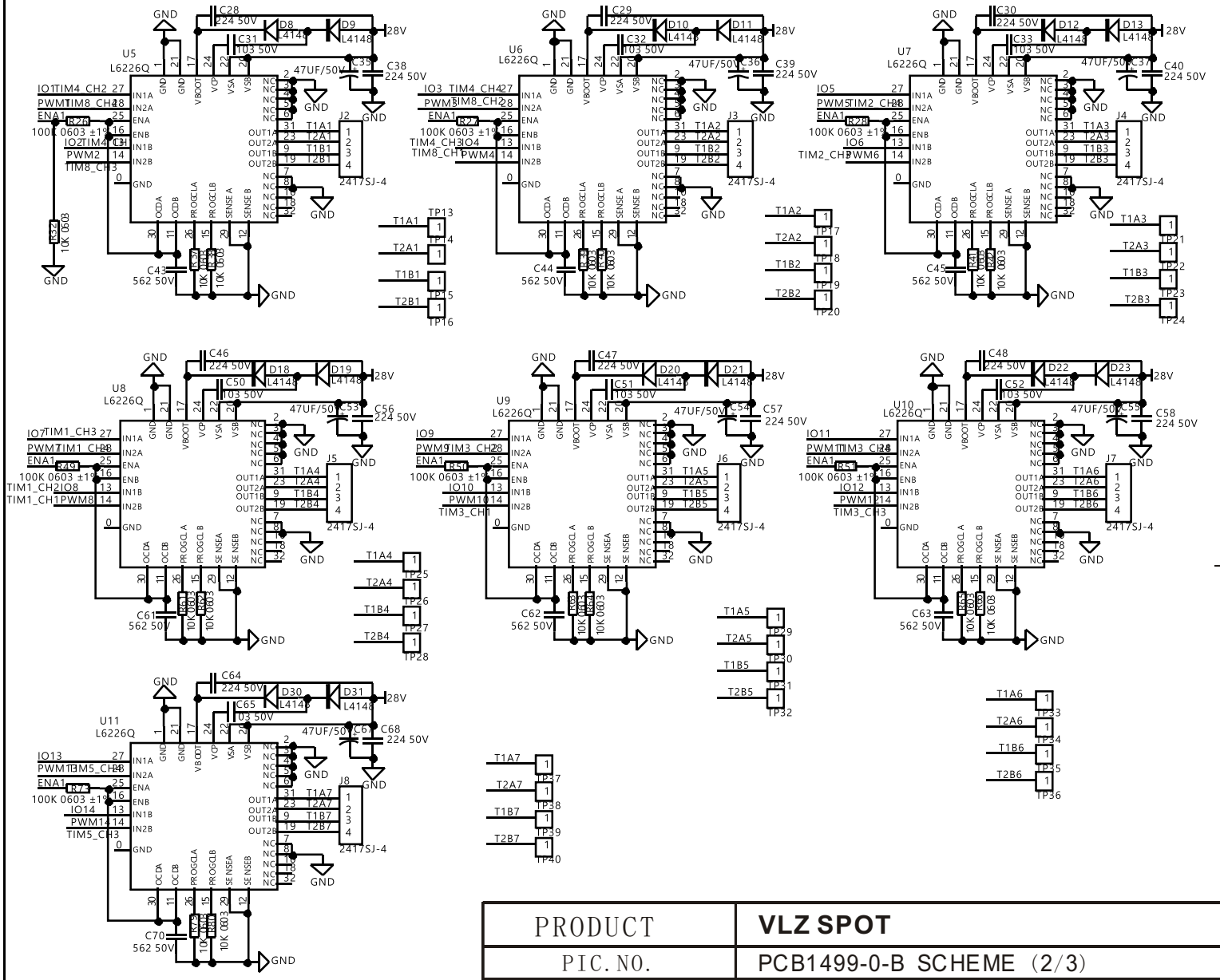

PRODUCT		VLZ SPOT			
PIC. NO.		PCB1499-0-B SCHEME (2/3)			
EDIT		FILE NO.	HY-WIEC-1906	PAGE NO.	49/56
CHECK		VERSION	NR	DATE	2018. 08. 07
APPROVE		ECN NO.		DATE	

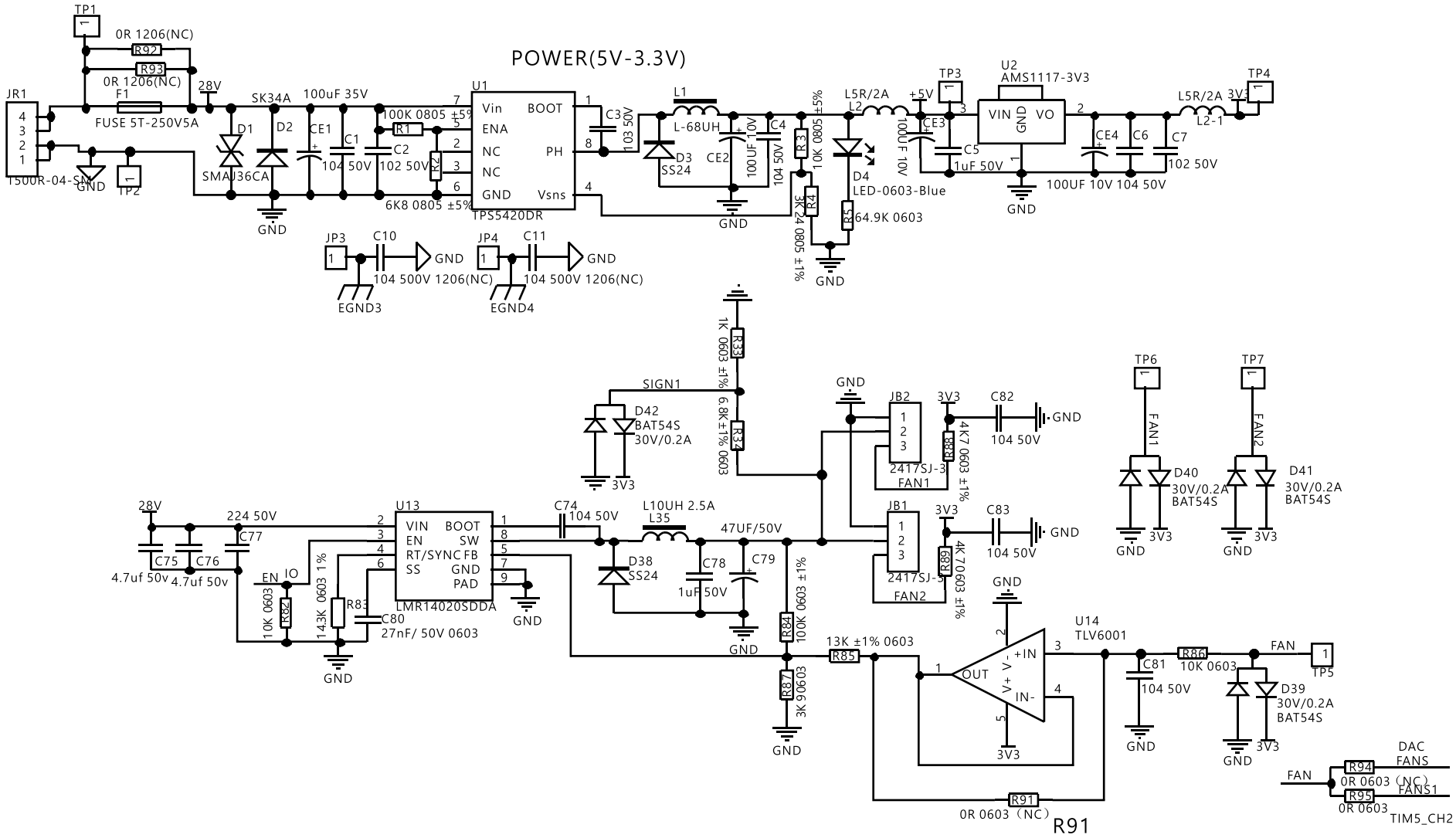

PRODUCT		VLZ SPOT			
PIC. NO.		PCB1499-0-B SCHEME (3/3)			
EDIT		FILE NO.	HY-WIEC-1906	PAGE NO.	50/56
CHECK		VERSION	NR	DATE	2018. 08. 07
APPROVE		ECN NO.		DATE	

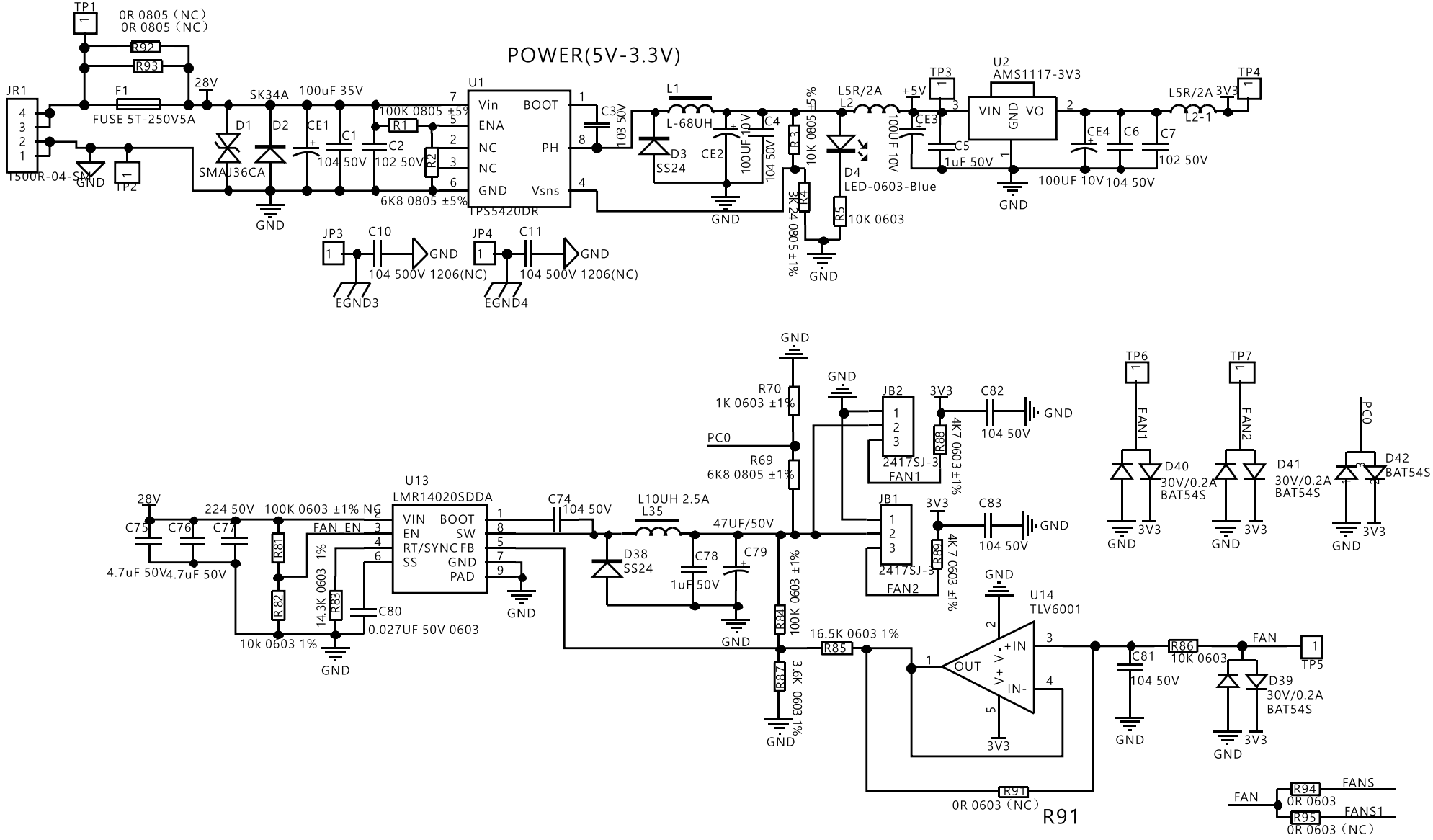

PRODUCT		VLZ SPOT			
PIC. NO.		PCB1497-0-B SCHEME (1/4)			
EDIT		FILE NO.	HY-WIEC-1905	PAGE NO.	51/56
CHECK		VERSION	NR	DATE	2018. 08. 07
APPROVE		ECN NO.		DATE	

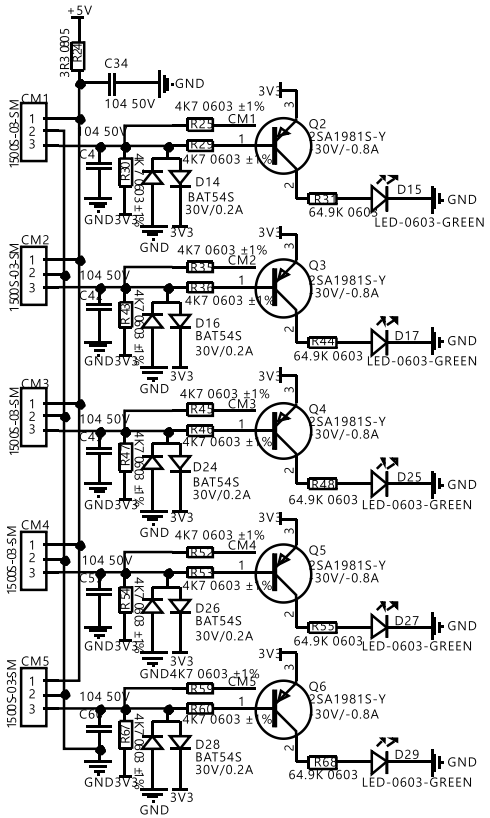

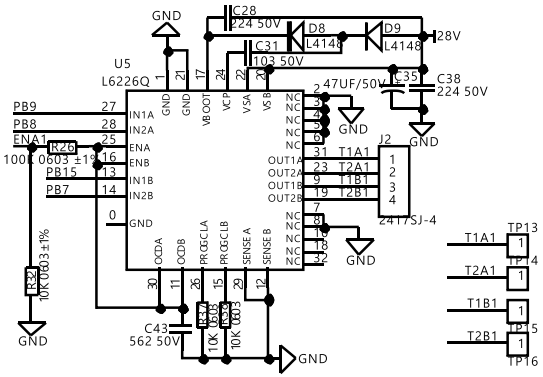

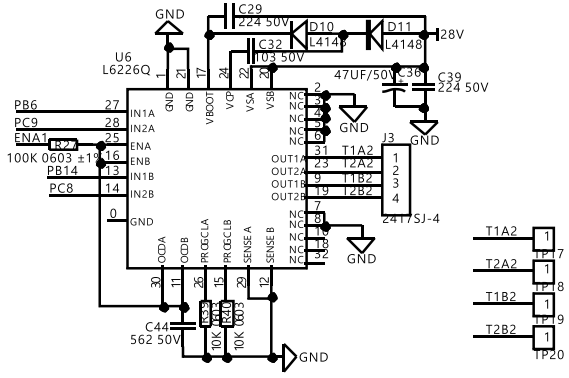

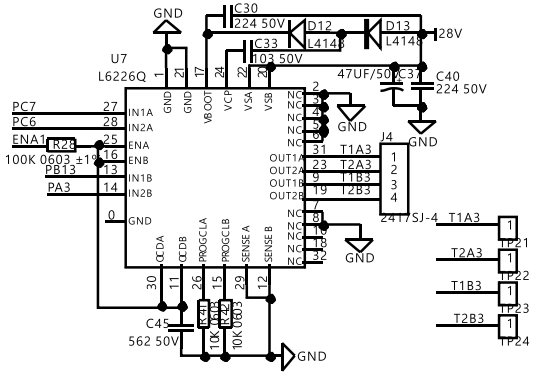

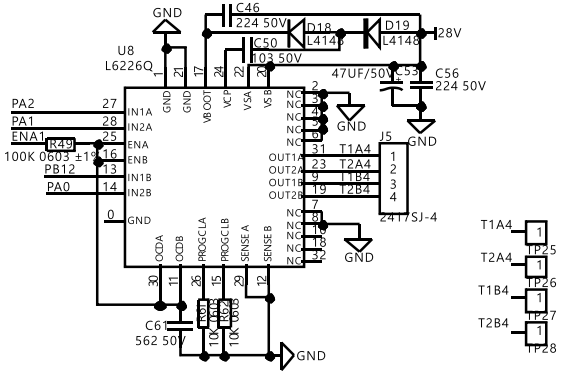

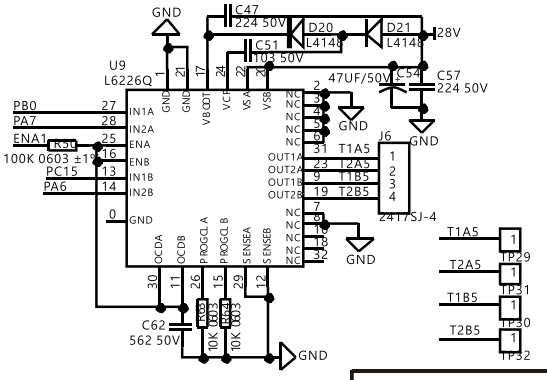

PRODUCT		**VLZ SPOT**			
PIC. NO.		PCB1497-0-B SCHEME (2/4)			
EDIT		FILE NO.	HY-WIEC-1905	PAGE NO.	52/56
CHECK		VERSION	NR	DATE	2018. 08. 07
APPROVE		ECN NO.		DATE	

01
PCB1152-0-A CPU.SchDoc

02
PCB1152-0-A MOTOR.SchDoc

03
PCB1152-0-A POWER.SchDoc

PRODUCT		VLZ SPOT			
PIC. NO.		PCB1497-0-B SCHEME (3/4)			
EDIT		FILE NO.	HY-WIEC-1905	PAGE NO.	53/56
CHECK		VERSION	NR	DATE	2018. 08. 07
APPROVE		ECN NO.		DATE	

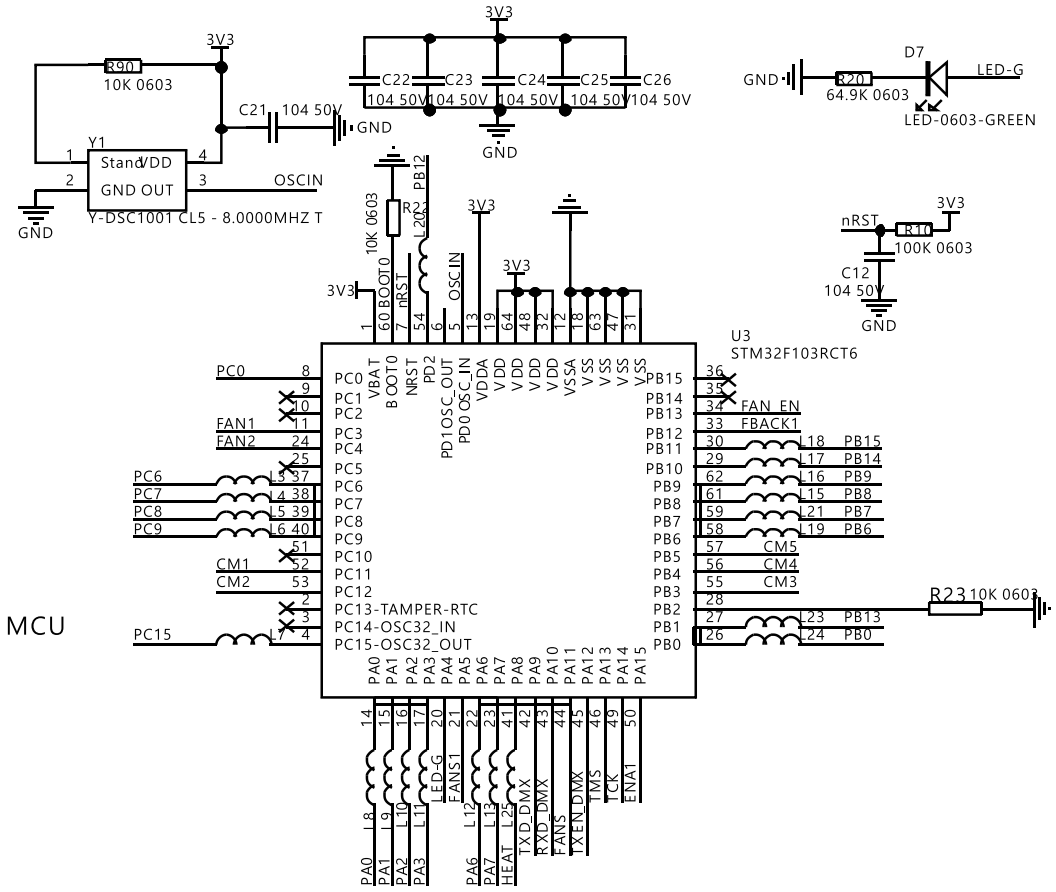

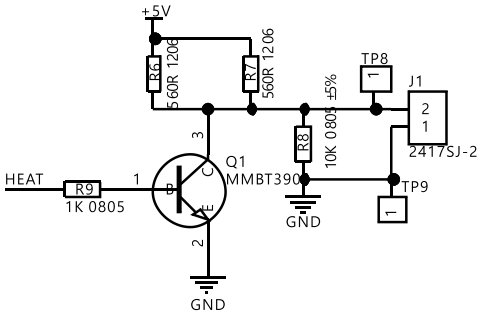

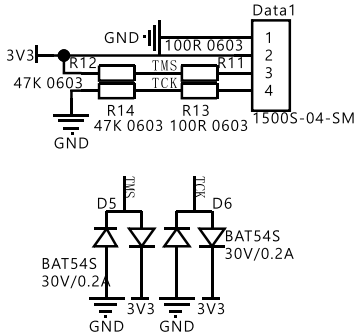

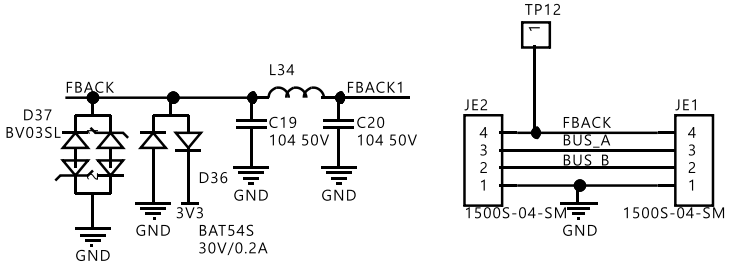

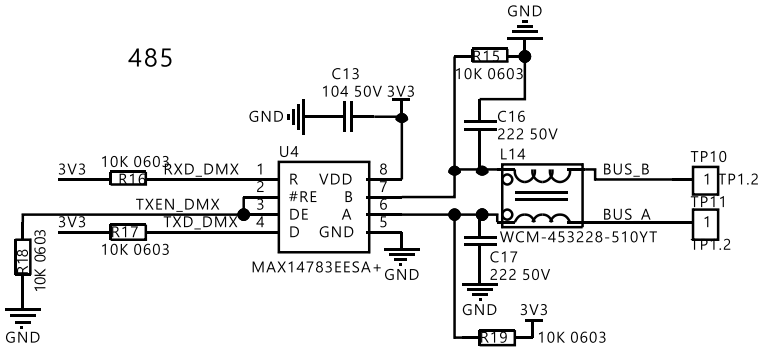

PRODUCT		VLZ SPOT			
PIC. NO.		PCB1497-0-B SCHEME (4/4)			
EDIT		FILE NO.	HY-WIEC-1905	PAGE NO.	54/56
CHECK		VERSION	NR	DATE	2018. 08. 07
APPROVE		ECN NO.		DATE	

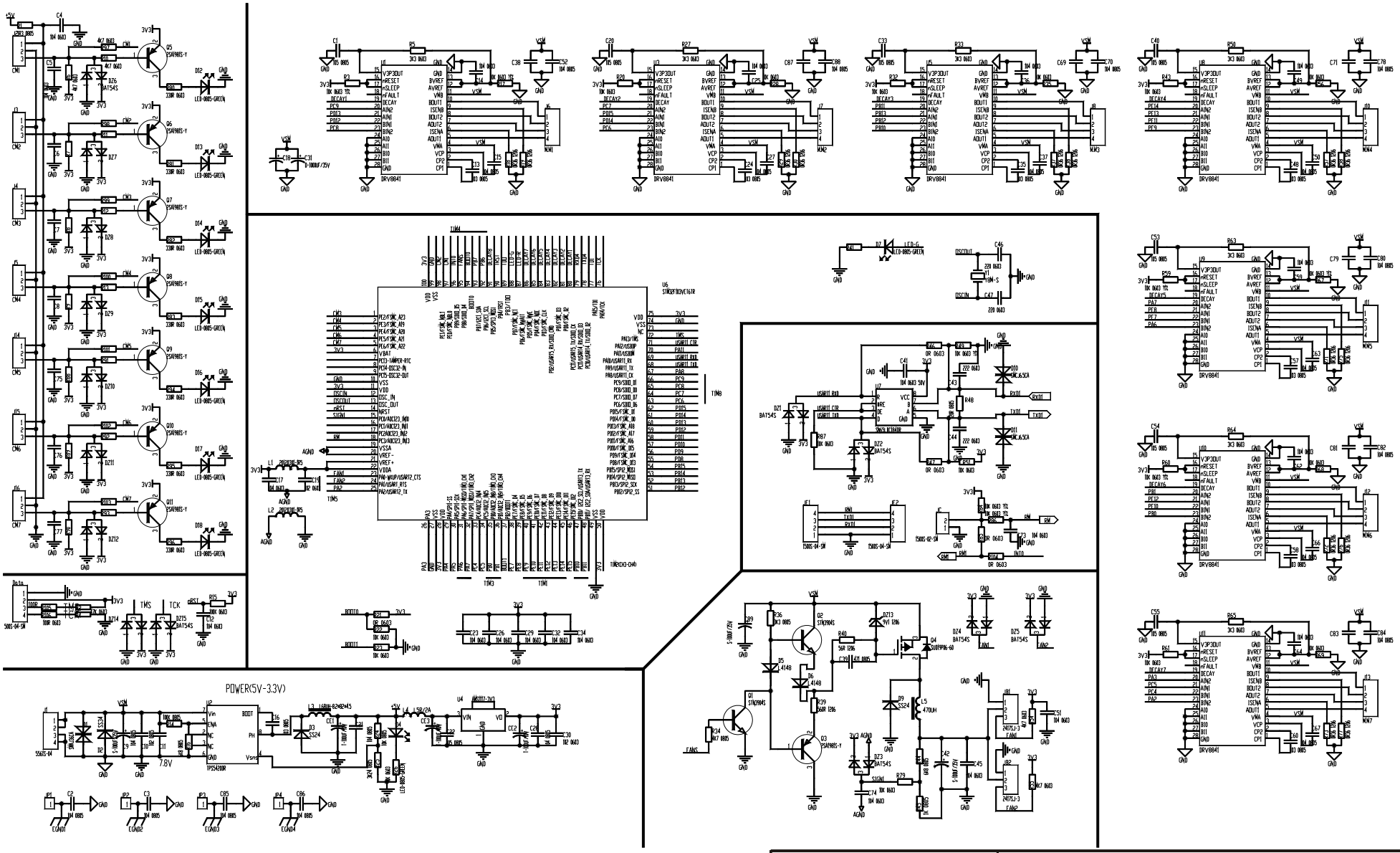

PRODUCT		VLZ SPOT			
PIC. NO.		PCB1103-0-B SCHEME			
EDIT		FILE NO.	HY-WIEC-1389	PAGE NO.	55/56
CHECK		VERSION	NR	DATE	2018. 08. 07
APPROVE		ECN NO.		DATE	

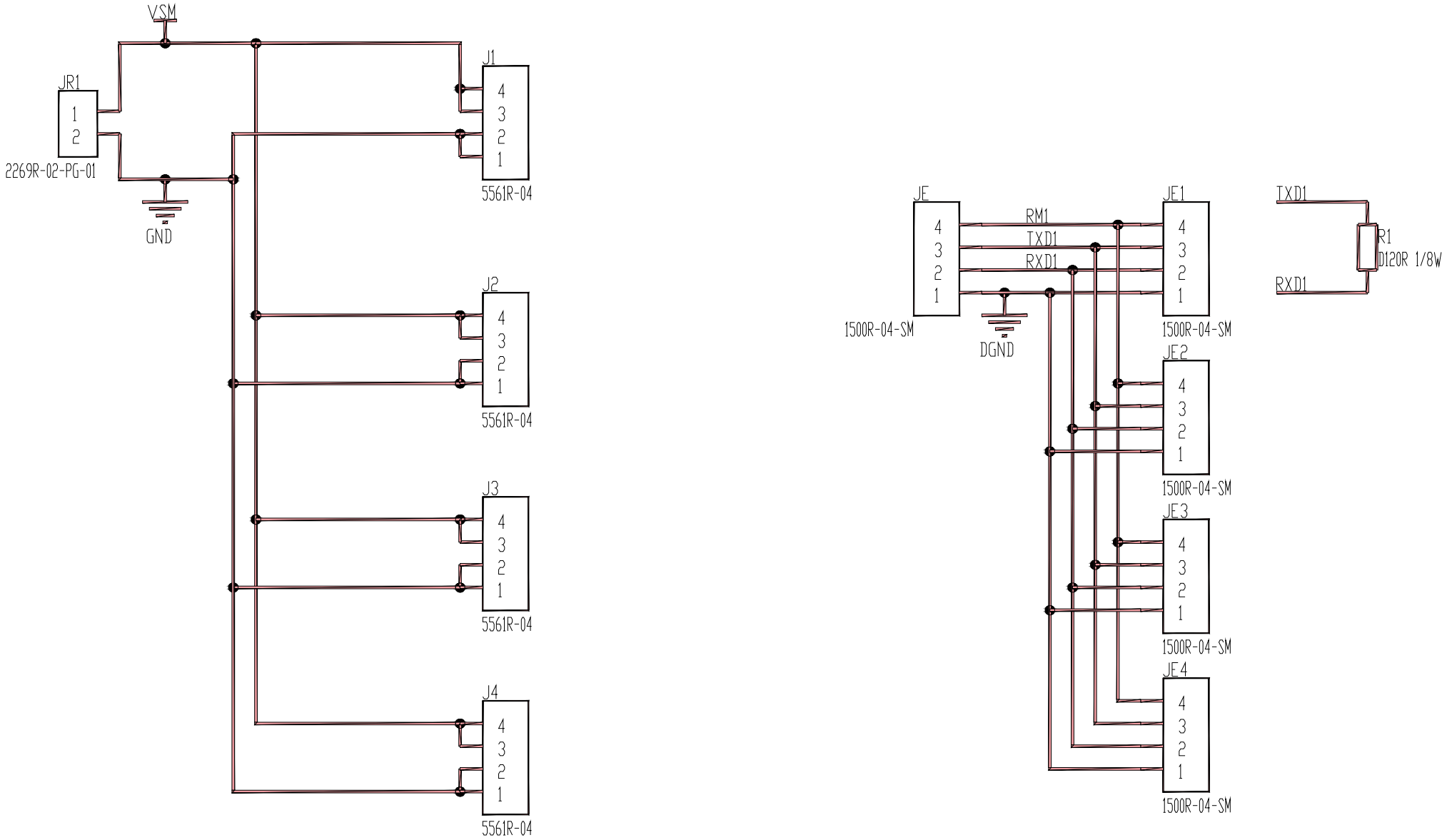

PRODUCT		**VLZ SPOT**			
PIC. NO.		PCB1111-0-A SCHEME			
EDIT		FILE NO.	HY-WIEC-1340	PAGE NO.	56/56
CHECK		VERSION	NR	DATE	2018. 08. 07
APPROVE		ECN NO.		DATE	